DOCUMENT 009113

ADDENDA

ADDENDUM NUMBER 5A

DATE: October 8, 2013

PROJECT: First Baptist Church of Highland Park

PROJECT NUMBER: 89-0908

OWNER: First Baptist Church of Highland Park

ARCHITECT: HCO, Inc.

TO: Prospective Bidders

This Addendum forms a part of the Contract Documents and modifies the Bidding Documents dated February 10, 2011 with amendments and additions noted below.

Acknowledge receipt of this Addendum in the space provided in the Bid Form. Failure to do so may disqualify the Bidder.

This Addendum consists of 4 pages and the following Specification Sections and Drawings:

11130	Video Production System	10/07/2013
AV0.00	AUDIO VIDEO NOTES AND LEGENDS	10/07/2013
AV1.20	AUDIO/VIDEO SYSTEMS PLAN VIEW GROUND LEVEL	10/07/2013
AV1.30	AUDIO/VIDEO SYSTEMS PLAN VIEW MEZZANINE LEVEL	10/07/2013
AV1.50	AUDIO/VIDEO SYSTEMS ENLARGED PLAN VIEWS CONTROL BOOTH AND AMP ROOM	10/07/2013
AV1.51	AUDIO/VIDEO SYSTEMS ENLARGED PLAN VIEWS SANCTURARY STAGE	10/07/2013
AV1.53	AUDIO/VIDEO SYSTEMS ENLARGED PLAN VIEWS BANQUET HALL	10/07/2013
AV1.54	VIDEO PRODUCTION PLAN VIEW LAYOUT	10/07/2013
AV3.03	AUDIO/VIDEO SYSTEMS SECTIONS BANQUET HALL	10/07/3013
AV4.53	AUDIO/VIDEO SYSTEMS ENLARGED RCP BANQUET HALL	10/07/2013
AV5.03	AUDIO PANELS	10/07/2013
AV5.11	VIDEO RACK DETAILS	10/07/2013

AV5.12	VIDEO RACK DETAILS	10/07/2013
AV5.13	VIDEO RACK DETAILS	10/07/2013
AV5.14	VIDEO RACK DETAILS	10/07/2013
AV6.00	TECHNICAL POWER DETAILS	10/07/2013
AV6.02	VIDEO JUNCTION BOX SCHEDULE	10/07/2013
AV7.50	VIDEO SCHEMATICS	10/07/2013
AV7.51	VIDEO SCHEMATICS	10/07/2013
AV7.52	VIDEO SCHEMATICS	10/07/2013
AV7.53	VIDEO SCHEMATICS	10/07/2013
AV7.54	VIDEO SCHEMATICS	10/07/2013
AV7.55	VIDEO SCHEMATICS	10/07/2013
AV7.56	VIDEO SCHEMATICS	10/07/2013
AV7.57	VIDEO SCHEMATICS	10/07/2013
AV7.58	VIDEO SCHEMATICS	10/07/2013
AV7.59	VIDEO SCHEMATICS	10/07/2013

CHANGES TO THE PROJECT MANUAL

DOCUMENT 11130 – VIDEO PRODUCTION SYSTEM

1. Replace entire section in its entirety.

CHANGES TO THE DRAWINGS

DRAWING AV0.00 - AUDIO VIDEO NOTES AND LEGENDS

2. Replace sheet.

DRAWING AV1.10 – AUDIO/VIDEO SYSTEMS PLAN VIEW GROUND LEVEL

3. Replace sheet.

DRAWING AV1.30 – AUDIO/VIDEO SYSTEMS PLAN VIEW MEZZANINE LEVEL

4. Replace sheet.

DRAWING AV1.50 – AUDIO/VIDEO SYSTEMS ENLARGED PLAN VIEWS CONTROL BOOTH AND AMP ROOM

5. Replace sheet.

DRAWING AV1.51 – AUDIO/VIDEO SYSTEMS ENLARGED PLAN VIEWS SANCTURARY STAGE

6. Replace sheet.

DRAWING AV1.53 – AUDIO/VIDEO SYSTEMS ENLARGED PLAN VIEWS BANQUET HALL

7. Replace sheet.

DRAWING AV1.54 – VIDEO PRODUCTION PLAN VIEW LAYOUT

8. Replace sheet.

DRAWING AV3.03 – AUDIO/VIDEO SYSTEMS SECTIONS BANQUET HALL

9. Replace sheet.

DRAWING AV4.53 – AUDIO/VIDEO SYSTEMS ENLARGED RCP BANQUET HALL

10. Replace sheet.

DRAWING AV5.03 – AUDIO PANELS

11. Replace sheet.

DRAWING AV5.11 – VIDEO RACK DETAILS

12. Replace sheet.

DRAWING AV5.12– VIDEO RACK DETAILS

13. Replace sheet.

DRAWING AV5.13 – VIDEO RACK DETAILS

14. Replace sheet.

DRAWING AV5.14 – VIDEO RACK DETAILS

15. Replace sheet.

DRAWING AV6.00 – TECHNICAL POWER DETAILS

16. Replace sheet.

DRAWING AV6.02 – VIDEO JUNCTION BOX SCHEDULE

17. Replace sheet.

DRAWING AV7.50 – VIDEO SCHEMATICS

18. Replace sheet.

DRAWING AV7.51 – VIDEO SCHEMATICS

19. Replace sheet.

DRAWING AV7.52 – VIDEO SCHEMATICS

20. Replace sheet.

DRAWING AV7.53 – VIDEO SCHEMATICS

21. Replace sheet.

DRAWING AV7.54 – VIDEO SCHEMATICS

22. Add sheet in its entirety.

DRAWING AV7.55 – VIDEO SCHEMATICS

23. Add sheet in its entirety.

DRAWING AV7.56 – VIDEO SCHEMATICS

24. Add sheet in its entirety.

DRAWING AV7.57 – VIDEO SCHEMATICS

25. Add sheet in its entirety.

DRAWING AV7.58 – VIDEO SCHEMATICS

26. Add sheet in its entirety.

DRAWING AV7.59 – VIDEO SCHEMATICS

27. Add sheet in its entirety.

END OF DOCUMENT

PART 1 - GENERAL

1.1 GENERAL REQUIREMENTS

A. All requirements under Instructions to Bidders, General Conditions, Supplementary Conditions, Special Conditions, Division One (1), Technical Specifications, Referenced Documents or Practices and any Addenda of these Specifications shall be a part of this section. Each Contractor is responsible to be thoroughly familiar with all its contents as to requirements which affect this Division or Section. Coordinate all items with Owner to insure that all items are furnished in accordance with Owner standards.

1.2 RELATED DOCUMENTS

A. AV Drawings

B. 27 41 36 - Sound Reinforcement System

1.3 REFERENCES

A. National Fire Protection Association (N.F.P.A.).

B. American National Safety Institute (A.N.S.I.).

C. National Electrical Code (N.E.C.).

D. Underwriters Laboratories (U.L.)

E. Electronics Industries Association (E.I.A).

F. National Cable Television Association (N.C.T.A.)

G. Society of Motion Picture and Television Engineers (S.M.P.T.E.)

H. International Telecommunications Union (I.T.U.-T.)

I. CCIR 601

J. EIA RS-170A

1.4 RESPONSIBILITY AND RELATED WORK

A. The written specification and drawings AV0.00 through AV7.59 shall be collectively referred to herein as the Contract Documents.

B. The systems described in this section will be called the “Production Systems” and the installer will be named “The Contractor.” The Contractor will provide all labor, materials, equipment, necessary tools, test equipment, hoisting, transportation, supervision and coordination necessary to complete the installation of the “Production Systems” as described in these specifications and illustrated on the Project drawings.

C. Contractor shall provide, based on the Contract Documents, a complete, turnkey system, tested and ready for acceptance testing. The Contract Documents are developed to the extent required to properly convey design intent, signal flow, and system infrastructure. It is understood by the contractor that they are to supply additional equipment, as required, in order to provide a complete and working system.

D. System features or devices which are mentioned in one part of the Contract Documents may not be shown in the other. In case of conflict between the written specifications and the drawings, Contractor must seek clarification from the Consultant. In the event that the Contractor fails to obtain such clarification, the interpretation of the Consultant will prevail.

E. The Contractor will provide minor accessories, such as power supplies, connectors, adapters, matching devices and equipment items needed for a complete system, even if not specifically mentioned herein or on the drawings, without claim for additional payment.

F. Contractor shall obtain all licenses and permits necessary for the execution of any work pertaining to the installation within this scope of work.

G. Contractor will comply with all union jurisdiction and prevailing wage requirements for the completion of the project. Questions regarding jurisdiction and wage should be directed to the Owner.

H. If a conflict is identified between the specification and the appropriate codes and is reported to the General Contractor and confirmed prior to project award, the Architect will prepare the necessary clarification or revision. When a conflict is reported after project award, the Contractor will propose a resolution of the conflict and, upon approval, perform related work.

I. Coordinate with other contractors as required and in a timely fashion to convey all information (scheduling, structural, electrical, technical or otherwise) necessary to complete the project.

J. Coordinate any installation of rack mounted devices into facility equipment racks with others.

K. Provide and install equipment racks in a manner in keeping with local seismic codes. Racks are to be electrically decoupled from flooring to prevent coming into contact with any safety grounded items during operation. Raised floor stringer grids must not make contact with the racks, but may be secured to rack risers. Racks should be mounted on rack risers that are bolted to the slab independently of the raised flooring systems. Rack risers may be separated from the racks using either rubber matting or masonite and bolts may be sleeved with nylon bushings for isolation.

L. The Contractor will be responsible for the supply and installation of AC power connections and circuits within the equipment racks that are to be provided under this section. The Contractor is to provide a 4”x4” J-Box at the bottom of each rack with power circuit cabling terminating in 24” pig tails. Label each outlet as to which AC circuit is feeding it and provide the same information in the circuit breaker panel. The Contractor will provide all AC power and conduit to the equipment racks and will terminate AC power circuits within J-Boxes at bottom of racks.

M. The Contractor will be responsible for connecting ground point to all equipment in accordance with NEC code and standards specified.

N. The Contractor will provide a dielectrically insulated ground joint connection that will isolate any conduit systems from the chassis of the rack where conduits enter any equipment racks provided under this section.

O. Provide all transportation and hoisting.

P. Provide protective covering during construction/installation to prevent damaging or entrance of foreign matter.

Q. Replace at no expense to Owner, product damaged during delivery, storage or handling.

R. Provide safe and protected storage. The Owner takes no responsibility for damage or theft relating to negligence in failure to secure equipment by The Contractor. If secure on-site storage cannot be arranged with the Owner, it will be The Contractors responsibility to procure portable on-site storage.

S. Provide and install all cabling necessary to complete the full scope of work for all equipment provided and designated owner furnished pieces of equipment. Provide termination in the Video Production Room, Production Rack Room, Edit Suites, Audio Recording, and Sound Reinforcement Booth of all cable types from throughout the facility as relate to the contracted scope of work. Any new facility cable extending to points outside of the video/audio production area will be provided and installed by the Contractor. The Contractor will provide and install the patchbays within the Production Rack Room.

T. Refer to AV0.00 for division of responsibilities related to the video production system.

1.5 SYSTEM DESCRIPTION

A. The majority of the system's production equipment components shall be operated from the Video Production Suite. All recording, distribution and control equipment will be housed in racks at this location.

B. Character generation systems will be provided for production as sources. Their primary function will be character and graphics generation for the IMAG production system.

C. A fiber camera cable and video tie line infrastructure shall be installed throughout the facility for coverage of any events within the facility by camera systems. These cables will terminate on patch bays in the engineering racks.

D. The Worship Center System will consist of two 10,500 ANSI lumen rear projection systems fed HD-SDI signals from a broadcast switcher located in the Video Production Suite. Confidence Projection systems will consist of two 7,200 ANSI lumen front projection systems fed HD-SDI signals from a broadcast switcher located in the Video Production Suite.

E. Primary control of the projection system will be by Network control thru IP addressable control devices.

F. Worship Center Projection System.
   1. The video projection screen systems shall consist of two 10'W x 10.125'H flexible truss frame rear projection screens.
   2. The screens will be a truss-style aluminum frame as specified from the screen manufacturer. The frames shall be mounted on-axis with the video projectors as detailed in the drawing set.
   3. The image will be projected to the screen through .73:1 video projector lenses.
   4. The AV systems contractor will coordinate with the General Contractor will assure that all walls in the Production Control Room and Video Editing Rooms are colored flat gray, consistent with Kodak 18% gray. Refer to drawings for formula examples.

1.6 SUBMITTALS

A. All Submittals to comply with Division 1.

B. Product Data: Submit within 30 days of contract award. Submit manufacturer's product data sheets for each item of equipment that will be provided as part of this contract. Submit electronically as a single PDF. All equipment cut sheets will be arranged per specification section number. Provide a table of contents and a bookmark at the start of every product sheet.

A. Shop Drawings: Submit within 60 days of contract award. Failure to submit shop drawings with ample time for evaluation shall not entitle the contractor to an extension of contract time. There will be no work authorized on site without the prior submittal (and subsequent approval) of a complete set of shop drawings. Any exceptions to this must be in writing and approved by the Consultant. Shop drawings shall indicate complete details and dimensions of work to be performed. Shop drawings shall be formatted as outlined below, and should contain, but not be limited to, the following details:

1. Submitted as a multi-sheet PDF document with:
   a. 42" X 30" sheets
   b. Table of Contents.
   c. Bookmarks for every sheet with Sheet Name and Number
1. LCD Flat Panel locations, orientation, and mounting methods.
2. Custom Console Diagrams with overall dimensions including production switcher control panel and CCU control panel integration.
3. Rack/Furniture Layout and Location Diagrams with overall dimensions.
4. Location of all equipment in racks, consoles, millwork, enclosures or on counter top / tables with dimensions; wire routing and cabling within housings; AC power outlets, terminal strip and UPS locations.
5. Drawing of cable routing to racks and stations detailing plans for critical signal separation.
6. Antenna orientation, mounting elevation, and attachment hardware schedule.
7. Schematic diagrams for all Systems, including all wiring labels.
8. IP address schematic diagram showing network topology and each networked device with IP address.
9. Patch Bay details, including all patch point labeling.
10. Schedule of terminations for all systems.
11. AC power schedule.
12. Schematic drawings of any custom circuitry or equipment modifications, including connector pinouts and component lists.

C. Asbestos and PCB Certification: After completion of installation, but prior to Substantial Completion, the Contractor shall certify in writing that products and materials installed, and processes used, do not contain asbestos or polychlorinated biphenyls (PCB).

D. Hazardous Materials Notification: In the event no product or material is available that does not contain asbestos, PCB or other hazardous materials as determined by the Owner, a “Material Safety Data Sheet” (MSDS) equivalent to OSHA Form 20 shall be submitted for that proposed product or material prior to installation.

1. Bid Submittals:
   a. Contractor's Qualifications: Have previously installed at least 4 jobs of similar magnitude, completed within the last five years. Provide name and phone number of reference for each representative project. Identify at least one such completed job available for inspection by Consultant or Owner’s Representative.
   b. Bidder will confirm in writing that the firm has five years of experience with equipment and systems of the types specified, that the firm maintains a fully staffed and equipped service facility, and that the firm is a franchised dealer and authorized service facility for the major brands specified, and that the firm is properly licensed to work in Landover, Indiana.
   c. Bidder will confirm in writing that and Sub-contractor firm has five years of experience with equipment and systems of the types specified, that the Sub-contracting firm maintains a fully staffed and equipped service facility, and that the firm is a franchised dealer and authorized service facility for the major brands specified, and that the firm is properly licensed to work in Landover, Indiana. Bidding contractor will identify all Sub-contractors on the Bid Response team and a detailed scope of work for each Sub-contractor.
   d. Provide resumes of project manager, lead engineer and lead installers working on this project. This will include key team members of any Sub Contractor. Resumes must be submitted with this bid response

e. Provide a Schedule of Values with unit prices for all systems. Schedule of Values will be used for any add or deduct Change Orders. Bid responses without Schedule of Values will be returned without review. Bidding Contractor will submit spreadsheet formatted by specification section indicating manufacturers, model numbers, descriptions, total quantities, unit costs, and extended costs. Attach Schedule of Values at end of bid form.

2. Cable and Connector Submittal. Submit sample cables with connections and wire labels. Cable samples should be no greater than 24" in length. Submit 2 cable/connector assemblies for each type of cable used on the project. Cable jacket ID lettering must be included on sample cable.

3. Contractor to obtain all licenses and permits necessary for the execution of any work pertaining to the installation, or any operation by the Owner.

1.7 CONTRACT CLOSEOUT SUBMITTALS

A. Comply with all requirements of Specification Davison 1.

B. Keep a complete set of approved shop drawings on the job at all times. Non-approved shop drawings will not be allowed on the job site. Note any changes made during installation on a single set of drawings. This set of marked up drawings will not leave the jobsite until after the final system commissioning. Submit four (4) corrected sets of reproducible drawings showing Work as installed. All "as-built" drawings to be provided both in electronic form (ACAD 2000 or later) and in hard copy (42"x30").

C. System Reference Manual: Prior to Owner training, furnish 3 copies, in 3 ring binders, sized to hold the material plus 50% excess, with clear vinyl pockets on cover and spine for project title. Provide tabular dividers with permanent legends for the following sections:

1. System Operation and Instructions- Prepare a complete and typical procedure for the operation of the equipment as a system, organized by subsystem or activity. This procedure should describe the operation of all system capabilities. Assume the intended reader of the manual to be technically inexperienced and unfamiliar with this facility.
2. A list of all test results performed on the system as outlined in Section 3.2.
3. A list of all equipment, indicating manufacturer, model, serial number, and equipment location (i.e. rack/room number). Update following acceptance testing, if changed.
4. A list of all settings of all semi-fixed controls. Update this document after the final acceptance testing.
5. Photographically reproduced schematic wiring diagrams of the audio/video systems, based on the as-built documentation, at a reduced scale easy to handle but fully legible. Blueline (or similar diazo process) prints are not acceptable.
6. Maintenance Instructions, including Contractor's maintenance phone number(s) and hours; maintenance schedule, description of products recommended or provided for maintenance purposes, and instructions for the proper use of these products.
7. A legend of acronyms and abbreviations must accompany all documentation.
8. Replacement parts lists of major items of equipment.
9. Provide written report for dates of replacement of all batteries. This is to include UPS, and control systems.
10. For custom circuits or modifications, a description of the purpose, capabilities, and operation of each item.
11. For custom circuits or modifications, complete schematics and parts lists.

D. Manufacturer's Instruction Manuals for all items of equipment.

E. Manufacturer's Service Manuals and parts list for all equipment. Photocopies are not acceptable.

F. All warranty cards for all equipment shall be given to the owner in one folder without hole-punches or staples. For equipment that will be installed and access to read the serial number will be difficult or impossible, the contractor shall fill in the appropriate warranty card before installation.

G. System Remote Controls

1. All wireless/wired remotes for displays, VTRs, etc. to be collected and stored in or near production room. Coordinate with owner to ensure one remote of each model is stored in Video Control Room.

H. Software Licensing and Manuals. Provide backup computer discs/thumb drives, all software manuals and license certificates for all software loaded on all PC's.

I. Produce compact system flow diagrams showing all components, cables, and wire numbers that will be mounted on the wall of each equipment room and of the control booth. A maximum of 2 flow diagrams will be mounted on any equipment room wall. Photographically reproduced as-built wiring diagrams at a reduced scale, easy to handle, but fully legible. Blueline (or similar diazo process) prints are not acceptable. After approval, drawings will be mounted behind clear acetate and located with the equipment racks.

J. Asbestos and PCB Certification: After completion of installation, but prior to Substantial Completion, Contractor will certify in writing that products and materials installed, and processes used, do not contain asbestos or polychlorinated biphenyls (PCB).

K. Provide a complete list of spares inventory to include quantity, manufacturer, model number, and serial number.

1.8 CODE COMPLIANCE

A. All work and materials shall comply with all applicable codes and regulations to meet or exceed Federal, State, City, and Local Building Codes and Regulations. Advise the Architect if anything in the Plans or Specifications is out of compliance with codes and/or laws prior to bidding.

B. Comply with General Conditions and Section 01600/Materials and Equipment of CSI manual.

1.9 GUARANTEES

A. The Contractor shall warrant new equipment to be free of defects in materials and workmanship for not less than one year after date of Substantial Completion. Defects occurring in labor or materials within one-year warranty shall be rectified by replacement or repair. Within the warranty period, provide answer to service calls and requests for information within a 24-hour period, and repair or replace any faulty item within a 72-hour period without charge, including parts and labor. This warranty period does not extend to any existing equipment which is reused in the project.

B. This warranty shall not void specific warranties issued by manufacturers for greater periods of time. Nor shall it void any rights guaranteed to the Owner by law.

C. Contractor to provide Owner with exact beginning and ending dates of the warranty period. Include the name of the person to call for service and telephone number. This information to be part of Project Record Set.

PART 2 - PRODUCTS

2.1 UNAUTHORIZED MATERIALS

A. Materials and products required for work of this section will not contain asbestos, polychlorinated biphenyls (PCB) or other hazardous materials identified by the General Contractor.

B. All devices and control stations will be UL Certified with attached identification label. If any equipment used is not UL Certified, then the Contractor will arrange onsite inspections and certification at no additional expense to the Owner.

2.2 ACCEPTABLE MANUFACTURERS

A. Model numbers and manufacturers included in this specification are listed as a standard of quality.

B. Consultant will consider other qualified manufacturers subject to review. The Contractor will supply complete technical data specifications at the time of proposed substitution. The Contractor will arrange for product demo at the request of the Consultant or Owner Representative and will pay ground freight shipping to and from site, or to and from Consultant's office. The Owner, General Contractor, and the Consultant reserve the right to accept or refuse any substitution without condition.

C. Substitutions: Formally request and submit a project substitution form for review. Any proposed substitutions must meet all specifications of the specified equipment. No product substitution shall be accepted without written approval from the Consultant. The Contractor shall remove all unauthorized substitutions, procure, replace, and reinstall the specified product with no additional request for payment.

D. If product is discontinued and/or no longer publicly advertised as a part of a manufacturer's current product line-up at time of installation, the project team reserves the right to request a substitution of product for new and currently offered product of like function fulfilling the design intent. Substitution value will be based on fair market value of original product at time of bid.

2.3 GENERAL

A. All equipment supplied will be new and meet the latest published specifications of that product. Take care during installation to prevent scratches, dents, chips, etc.

B. Safe and protected storage will be the responsibility of The Contactor. The owner takes no responsibility for damage or theft relating to negligence in failure to secure equipment by The Contractor. If secure on-site storage cannot be arranged with the owner, it will be The Contractors responsibility to procure portable on-site storage. This is highly recommended.

C. Shipping and Handling.
   1. Handle and ship in accordance with manufacturer's recommendation.
   2. Provide protective covering during construction/installation to prevent damaging or entrance of foreign matter.
   3. Replace at no expense to Owner, product damaged during delivery, storage or handling.

D. Final quantities of all equipment will be determined by The Contractor in collaboration with and approval by the Owner.

E. The contractor shall not break down or throw away any boxes or associated packing material without the permission of the owner, and only after each system and component has been commissioned by Acoustic Dimensions. It is recommended that one box of each type of equipment be kept for shipping purposes.

2.4 PRODUCTION CAMERAS

A. Contractor shall be responsible for the integration of camera components into complete and balanced systems. Camera Systems are to be ready prior to commissioning.
   1. Contractor to provide 11-step Grayscale chart with center true black, 16:9.
      a. DSC Labs SRW-GS Senior grayscale chart or equivalent in size (Qty: 1)
   2. Contractor to provide back focus chart
      a. Generic backfocus chart (Qty: 1)

B. The Remote Control Panels for the Camera CCU's will be integrated into a custom camera shading operator's console desktop to be coordinated with Forecast Consoles and installed by the Contractor. Contractor will provide manufacturer RCP mount dimensions to Forecast Consoles.

C. Contractor shall provide a 2 color tally system integrated directly with the primary IMAG and Broadcast switcher M/Es, camera control units and their respective cameras.
   1. Hitachi Camera Systems:
      a. Hitachi ZHD5000 Studio Package (Qty: 3) includes:
         1) Camera Head (includes 2" Viewfinder)
         2) Tripod Plate
         3) 7"-8" LCD Viewfinder
         4) Fiber Camera Adaptor
         5) CU-HD500 CCU
         6) Hitachi RCZ21-S10 RCP
      b. 1-Day Hitachi Camera Commissioning and Training (Qty: 1)
   2. Camera Lenses
      a. Canon KJ20X82BIRSD (Qty: 3)
      b. Canon MS-210D (Qty: 3)
   3. Tripod
      a. Vinten V100-AP2M Vision 100 Tripod System Black, telescopic pan arm, mid-level spreader (Qty: 3)
      b. Vinten 3219-91 Telescopic Pan Bar Black (Qty: 3)

D. POV Camera
   1. Contractor to provide appropriate, low-profile mounting device.
   2. Contractor to provide mounting method for adjacent power supply if applicable.
   3. Camera
      a. Orion Images CHDC34-BSDC (Qty: 1)
   4. Lens
      a. Fujinon YV4.3x2.8SA-2 (Qty: 1)
   5. POV Monitoring
      a. LG 32LN5700 (Qty: 1)
      b. AJA Hi5 HD-SDI to HDMI Converter (Qty: 1)

2.5 VIDEO PRODUCTION SWITCHING

A. Production Switcher

1. Contractor shall assure that all internal system components and the latest software versions to support all options are installed and/or configured by the manufacturer or manufacturer's rep.
2. A tally system shall be integrated between the production switcher and all video monitors and CCU's in the production room (RED and GREEN). RED will represent only a Program "take" from MLE 2, and GREED from MLE 1 . Contractor shall integrate the GPI interface to allow Hitachi RCPs to trigger Aux 1 on the production switcher for Engineering/Shading preview.
1. Production Switcher Package
   a. Ross Video Carbonite C2-216-001 2M/E Switcher with 16 source button 2M/E panel (Qty: 1)
   b. 1-Day Ross Training/Commissioning (Qty: 1 day)
2. Accessory
   a. Winford BRK37M-R-DIN breakout (Qty: 2)

2.6 VIDEO ROUTER

A. The latest version Blackmagic Videohub Router software is to be provided and installed by the Contractor into the Utility Computer (MAC-102).

B. The contractor is responsible for programing the router panels to the owner's specifications. Final layout, programming and labeling of all panels will be coordinated with the owner on site during installation.
   1. Router
      a. Blackmagic Design COMPACT VIDEOHUB 40x40 (Qty: 1)
   2. Panels
      a. Blackmagic Design Master Control Panel (Qty: 1)
      b. Blackmagic Design Smart Control Panel (Qty: 2)

2.7 VIDEO MONITORING

A. Video Production
   1. Shading Station
      a. Ikegami HLM-1704WR (Qty: 2)
      b. Harris CMN-91 Waveform/Vectorscope (Qty: 1)
   2. Monitoring
      a. LG 42LN5700 (Qty: 2)
      b. LG 22LN4500 (Qty: 1)
   3. Converters
      a. AJA HD10C2 Qty: 2)
      b. AJA Hi5 (Qty: 1)
   4. Lighting Station
      a. Ikegami HLM-905WR (Qty: 1)

B. Audio Production
   1. Contractor to supply low profile slim Chief Mount per on-site conditions
   2. Display
      a. LG 42LN5700 (Qty: 1)
   3. Converter
      a. AJA Hi5 (Qty: 1)

2.8 PRODUCTION CG SYSTEM

A. Character Generation System
   1. Contractor shall assure that all internal system components and software are installed and/or configured by the contractor, manufacturer, or manufacturer's representative.
   2. Contractor shall assure provision of manufacturer recommended WIRED Keyboard and Mouse.
      a. Renewed Vision Pro Presenter Presentation System:
      b. ProPresenter Software Site license – latest release (Qty: 1)
   3. Computer System per maximum specification of software manufacturer
      a. Apple Mac Pro (Qty: 1)
         1) Renewed Vision ProPresenter Installed (site-license)
         2) Renewed Vision Alpha Module w/ BMD Decklink HD Extreme I/O Card (Qty: 1)
            a) BMD UltraStudio 4K is also acceptable as alternative
   4. Monitor
      a. LG 22LN4500 HDTV (Qty: 1)

2.9 FOH PRESENTATION SYSTEM

A. Character Generation System
   1. Contractor shall assure that all internal system components and software are installed and/or configured by the contractor, manufacturer, or manufacturer's representative.
   2. Connection and device registration to facility LAN will be implemented by others for MAC computers.
   3. Contractor shall assure provision of manufacturer recommended Keyboard and Mouse.
   4. Renewed Vision Pro Presenter Presentation System:
      a. Computer System per maximum specification of software manufacturer
      b. Apple iMac 21.5" (Qty: 1)
         1) Renewed Vision ProPresenter Installed (site-license)
   5. Switcher
      a. Extron DVS 605 AD (Qty: 1)
   6. Converter
      a. Grass Valley ADVC G1 (Qty: 1)

B. Terminal Gear
   1. Twisted Pair
      a. Crestron DM-TX-200-C-2G Transmitter w/ Power Supply (Qty: 1)
      b. Crestron DM-RMC-100-C Receiver w/ Power Supply (Qty: 1)
   2. DA
      a. Extron MDA 5V (Qty: 1)

2.10 AUDIO FOR VIDEO

A. Audio
   1. Mixer
      a. Soundcraft Expression 1 (Qty: 1)
   2. Microphones

a. Rode NTG1 (Qty: 2)
b. Rode SM4 Mounts (Qty: 2)

3. DA
   a. Rane DA 216S (Qty: 1)
4. Volume Control
   a. SMPro Audio NanoPatch Plus (Qty: 1)
5. Speakers
   a. Adam Audio A7X (Qty: 2)
6. Monitor
   a. Fostex RM-2 (Qty: 1)
7. Isolator
   a. Jensen JT-11P-1 (Qty: 2)

B. INTERCOM

1. Contractor will construct 1RU RPV-01, RPV-02, and RPV-03 per Video Panel Details.
2. Contractor to supply and install terminated XLR intercom cables (brown) to each device, including loose beltpacks. Each Beltpack to receive a 20' terminated intercom cable.
3. Contractor to supply and install Y cables and 6-pin extension cables per schematics for each 2 channel belt pack.
4. Contractor to verify all headset connectors to insure compatibility with Clear-Com systems when connected to Clear-Com devices; insure compatibility for Hitachi connectors for camera headsets supplying correct impedance microphones for camera use (CC-400 headsets).
5. Master Station
   a. Clear-Com MS-704 (Qty: 1)
6. User Stations
   a. Clear-Com RM-704 (Qty: 3)
   b. Clear-Com RM-702 (Qty: 1)
7. Belt Packs
   a. Clear-Com RS-601 (Qty: 3)
   b. Clear-Com RS-602 (Qty: 1)
8. Accessories
   a. Clear-Com GM-18 (Qty: 1)
   b. Clear-Com IC25/6 25' 6-pin wire – for RS-602 (Qty: 1)
   c. Clear-Com YC-36 Y-Cables for RS-602 (Qty: 1)
9. Headsets
   a. Clear-Com HS-6 Telephone Style (Qty: 2)
   b. Clear-Com CC-26K-X4 (Qty: 5)
   c. Clear-Com CC-300-X4 (Qty: 3)
   d. Clear-Com CC-400-X5 (Qty: 3)
10. Interface
    a. Clear-Com IF4W4 Camera Interface (Qty: 1)
11. Flasher
    a. Clear-Com FL7 (Qty: 2)

2.11 CONTROL SYSTEM

A. Contractor to provide programming of Crestron system per owner's instruction. The programming and GUI design shall allow for basic operations of each product that is controllable and connected to the Control LAN system.

B. Contractor shall provide a complete flow diagram with screen captures of the control system in single file multi-sheet PDF for approval by the Consultant prior to installation.

C. The source code is the ownership of the client and the code shall be given to the client via flash drive upon completion of commissioning. Password (if any) will be given to the client.

D. One set of revisions will be given free of charge after initial programming is complete.

E. All equipment (TVs, Projectors, etc.), in addition to group functions, will be individually addressed with unique ID numbers.

F. Presets

1. Contractor to coordinate with the owner to provide presets for system control, such as monitor wall on/off, lobby displays on/off (groups and all).

2. Presets that contain control of TVs will send a "volume down" command for a length of time to be determined by the owner when make/model is determined and can be tested.

G. Local Control

1. Where Owner requests, and TV is capable, local control via buttons or IR will be disable. If software control to perform this is unavailable, local mean of blocking the IR receiver and rear buttons will be performed by the Contractor.

H. Additional Sources for GUI programming to be coordinated with the client.

1. Minimum Controls Required:

a. Projection (as available per model)

1) Power On/off
2) Lens shift
3) Focus/zoom (as available)
4) Input/source
5) Menu
6) Up/down/left/right arrows
7) Enter (OK)
8) End (Exit)
9) Keystone

b. Displays

1) Power On/off
2) Input/source
3) Menu
4) Up/down/left/right arrows
5) Enter (OK)
6) End (Exit)

7) Volume up/down
8) Channel up/down
9) 10-Digit Keypad

c. DVD Recorder
1) Power On/off
2) Menu
3) Up/down/left/right arrows
4) Enter (OK)
5) End (Exit)
6) Transport Control (FF, RW, Next Chapter, Pause, Stop, Play, etc.)
7) Record (where applicable)
8) Finalize (where applicable)

I. Tablet Control
1. Contractor will furnish one iPad new and sealed. The Client will configure and install the Mobile Pro App using the client's Apple I.D. Contractor to install/configure the app layout and function to match touchscreen controls.
2. Tablet
a. Apple iPad 16GB black (Qty: 1)
3. Touch Screen
a. Crestron TSW-750 (Qty: 1)
b. Crestron PWE-4803RU (Qty: 1)
c. Crestron IRP2 (Qty: 3)
4. Processor
a. Crestron CP3 (Qty: 1)

2.12 DVD RECORDING AND MONITORING

A. Contractor to integrate recorders into rack shelves.

B. Recording

1. DVD Recorder
a. Recorder Toshiba – model available (Qty: 1)
1. Terminal Gear
a. AJA HD10CEA (Qty: 1)
b. RDL FP-BUC2 (Qty: 1)
2. Monitor
a. LG 22LN4500 (Qty: 1)

2.13 NETWORK

A. Contractor shall provide for a complete, independent network to connect all IP enable hardware include in 27.41.30. Network will include multiple VLANs, DHCP, and wireless access and will be configured as standalone unless client IT department requires different. Contractor will configure all hardware in 27.41.30 into one Control VLAN, and coordinate with 27.41.36 to connect all 27.41.36 hardware LAN connections to Control VLAN. Coordinate with audio for VLAN needs for audio signal transport; port control signals into Control VLAN as needed (only on devices where control and audio signal are on the same NIC). Configure all wireless access points to the same SSID and password, so that users and access wireless in all covered areas with the same login. Configure all hardware in 27.41.30 and 27.41.36 controlled by control processor to static IP addresses. Coordinate Static IP address with 27.41.36. Configure DHCP to allow room for all static IP addresses needed by controlled devices.

1. Switch
   a. Netgear GS7224T-300 (Qty: 1)
   b. Netgear GS108T-200 (Qty: 1)
2. WAP
   a. Apple Airport Extreme (Qty: 1)
   b. Apple Airport Express (Qty: 1)

2.14 **TERMINAL EQUIPMENT**

A. Contractor shall install Ross Video Dashboard software and Ensemble Designs Brighteye Software on MAC-102 utility Computer.

B. Contractor to coordinate with audio integrator to configure background audio playing from the MAC-102 via iTunes or other play out method (if applicable).

1. Utility Computer
   a. Apple Mac Mini (Qty: 1)
   b. 1RU slide out keyboard with integrated track pad (Qty: 1)
2. Monitor
   a. LG 22LN4500 (Qty: 1)
3. Audio
   a. RDL FP-UBC2 (Qty: 1)
4. Peripherals
   a. 4-port USB hub (Qty: 1)

C. Generator

1. Signal Generator
   a. Ensemble Designs Brighteye 56 (Qty: 1)

D. Terminal Gear Card Frame

1. Contractor to verify, supply, and install correct back plane for each frame and cards.
2. Card Frame
   b. Ross Video OG3-FR – [1 free with switcher purchase] (Qty: 2)

c. Ross Video power supplies to make both redundant (Qty: 2)
d. Network Card (Qty: 2)

3. Cards
   e. Ross UDA-8705A w/R2 (Qty: 3)
   f. Cobalt Digital 9003 (Qty: 5)
   g. Cobalt Digital 9001 (Qty: 1)
   h. Blackmagic Design CONVOPENGCAUDS Audio to SDI (Qty: 1)

E. Video Patch Bay
1. SDI signal patch point label font is to be colored blue and analog signal patch point label font is to be colored green.
   a. Bittree B64T-1MWNHD (Quantities Per Design)
   b. Bittree B64T-2MWNHD (Quantities Per Design)
   c. Bittree VPCM 24 02-75 Patch Cords (Quantity: 6)
   d. Bittree VPCM 24 05-75 Patch Cords (Quantity: 16)
   e. Bittree VPCM 24 06-75 Patch Cords (Quantity: 6)
   f. Bittree ADMW48 BNC to Mini-WECO (Quantity: 4)
   g. Bittree Mini-WECO Looping Plug ~ Green (Quantity: 6)

F. Audio Patch Bay
1. Mount Cord Holder at owner approved location.
   a. Bittree B96DC-HNOST/E3 M2OU12 w/Mating Hardware. (Quantities Per Design).
   b. Bittree BPC 24 00-110 Patch Cords (Quantity: 16)

G. Data Patch bay
   a. ADC ADCPP48505 RJ45 Patch Panel (Quantities Per Design)
   b. ADC ADCPC-RRC6B-BL03 Patch Cords (Qty: 24)

H. Camera Fiber Patch
1. Contractor to verify all Fiber connectors and adaptors necessary for complete camera signal chain.
2. Patching will be facilitated by flexible cable from CCU to fixed panel connectors (one for each drop in facility).
   a. All Facility Camera Cables to terminate to Neutrik OpticalCON panel connector (Qty per design) See Video Rack details AV5.13.

I. Fiber Patch Bay (Quantity per design requirements)
   a. ADC FL2000 System FL2-**XX**RPNL-B Series or Equivalent (Quantity per design requirements)
      1) Replace **XX** with size required.
   b. ADC Multimode Connector Plug-ins (Quantity per design requirements)
   c. ADC Single Mode Connector Plug-ins (Quantity per design requirements)
   d. ADC Adaptor Plug-ins (Quantity per design requirements)
   e. ADC Multimode SC Patch Cord (Qty: 24)
   f. ADC Single Mode SC Patch Cord (Qty: 24)

J. Fiber Camera Cables

1. The Contractor shall insure that flexible, portable, field-grade cables are provided that feed from the floor/wallbox to the camera head. No installation grade cables may be used outside of conduit.
2. AC Contractor to provide Camera cables with Neutrik OpticalCON Duo at box end, and Hitachi compatible SMPTE Lemo connection at camera end.
   a. 25’ (Qty: 2)
   b. 50’ (Qty: 1)

2.15 MATV EQUIPMENT

A. Contractor shall supply and integrate taps and splitter selected for indoor installation, with a minimum performance bandwidth of 1000Mhz. Components shall be Blonder Tongue or equal.

B. All RF components DOWNSTREAM of RFISO-102 shall be powered by Utility power, and if in rack, on ISO tabs.

C. Contractor to determine, supply and install tap and amplification values based on site cable run lengths and supply and install all splitters needed.

D. Transformers to be rack mounted on back of blank rack panel.

E. All devices must be physically isolated with appropriate iso tabs in rack.

F. Headend Equipment
   1. Modulator
      a. ZeeVee ZvPro620 (Qty: 1)
   2. Combiner
      a. Blonder Tongue HPC-8 (Qty: 1)
   3. Splitter
      a. Blonder Tongue SXRS-3 (Qty: 1)
   4. Isolation Transformer
      a. Jensen VRD-1FF (Qty: 2)
   5. Amp/tap/splitter
      a. As needed to make a balanced system
   6. Converter
      a. AJA V2ANALOG (Qty: 1)
   7. Digital Signage
      a. Apple Mac Mini with remote desktop software [POSSIBLE OFE] (Qty: 1)
      b. Mini Displayport to VGA adaptor (Qty: 1)

G. Distributed Displays
   1. Contractor shall coordinate locations for internal wall support for television mounts to G.C. per design.
   2. Television Model numbers shown as a level of quality. Must have LED backlit technology (all), Less than 2” deep (excludes 70”), 1920x1080 resolution (32” and larger), and RS232 Input (32” and larger).
   3. Lobby and Distributed Displays
      a. LG 42LN541C 42” HDTV (Qty: 4)
      b. LG 55LA6900 55” HDTV (Qty: 1)
   4. Mounts

a. Chief Manufacturing MTTU for 42” (Qty: 4)
b. Chief Manufacturing LSTU for 55” (Qty: 1)

5. Converters
   a. AJA Hi5 (Qty: 1)
   b. Global Cache IP2SL (Qty: 5)

2.16 VIDEO PROJECTION EQUIPMENT

A. Video Projection System
   1. Contractor shall verify all site conditions, and ascertain final unit location and distance from screen.
   2. Barco, Christie Digital, Panasonic, and Digital Projection alternative bids are acceptable with equivalent performance and specifications. For Alternate equipment, must fit within architecture for throw distance and lens offset. Consultant reserves the right to reject alternates based on these requirements.
   3. Contractor shall design and provide projector stands/mountings for each projection unit. Assuring stable perpendicular placement of projector in relationship to the screen. Stand/mount shall allow adjustment of projector roll (±4°), pitch (±25°), and yaw (±25°) for precise registration of the device. Contractor to submit these designs in drawing form to consultant prior to install.
   4. Coordinate placement of all materials with Architect.
   5. IMAG Video Projector
      a. Barco RLM-W12 10,500 ANSI Lumen HD Projector (Qty: 2)
      b. Barco BME P TLD+ 0.73 Lens (Qty: 2)
      c. One set of replacement lamps
   6. Confidence Projection
      a. Christie Digital LW720 7200 ANSI Lumen HD Projector (Qty: 2)
      b. Christie Digital 1.2-1.5:1 Zoom Lens (Qty: 2)
      c. AJA Hi5 Converter (Qty: 2)
      d. One set of replacement lamps

2.17 VIDEO PROJECTION SCREEN

A. Rear Projection Screens
   1. Screens to be furnished and installed by the video contractor.
   2. Contractor to verify on-site conditions prior to ordering screens.
   3. Installation of screens to be in accordance with manufacturer’s specification.
      a. Da-Lite 19’W X 10.6875’H Series 200 frame with New Dual Vision rear projection screen material. (Qty: 2)
      b. Da-Lite 16’W X 9’H Cinema Contour frame with perforated front projection screen material. (Qty: 2)

2.18 A/V FURNITURE

A. Equipment furniture color and work surfaces to be coordinated with Architect and owner.

B. Verify exact rack space requirements for accommodation of all new equipment, and provision of a service lamp in the top of each equipment rack.

C. Video Systems Installer to provide one (1) local single rack mounted rocker switch power on/off controls for all components located within the Engineering Rack locations.

D. Refer to AV5.11 through AV5.14 for Rack/Console Details
   1. Middle Atlantic Equipment Racks
      a. Middle Atlantic MRK-4431w/ Rear Doors (Qty: 3)
      b. Middle Atlantic top with fans (Qty: 1)
      c. Middle Atlantic top with vent (Qty: 2)
      d. Middle Atlantic Side Panels (Qty: 1 pair)
      e. Middle Atlanic CC-44-312 (Qty: 1)
      f. Middle Atlantic RIB-3-MRK-31 (Qty: 1)
      g. Blank Panels as needed
      h. Accessories as needed
   2. Rack Power
      a. Middle Atlantic PD-1220J-IG with NEMA 5-20p Power Strip to UPS (Qty: 3)

E. Contractor to coordinate switcher and Camera RCP recess integration into work surface. Contractor shall supply Forecast Consoles with exact dimensions of each piece.

F. Contractor shall verify correct LCD monitor arm capacity for each monitor's corresponding weight.

G. Refer to Forecast Consoles quote # 4594P1B.
   1. Video Production Furniture
      a. 6-bay Console with one switcher insert:
         1) Two custom 2RU raised turrets at switcher panels
         2) Four standard 4/2 turret
         3) Custom RCP insert and console cut-out with space for 5 RCPs, with 2 filler panels for future RCPs, and one large filler panel (equivalent to 4 RCPs) for sliding RCPs to TD.
      b. 6-bay Console:
         1) Two Standard 4/2 turrets
         2) One audio mixer sliding shelf top
         3) One 6 straight RU over 2 slanted turret
         4) Rear doors only
      c. Articulating Arms (5)
         1) Contractor to verify weights of each monitor to provide correct arm counter weight.
      d. Monitor Wall
         1) Free standing new design Sightline Forecast Monitor Wall per Forecast shop drawings.
         2) 32" TV should be on tilting articulating arm.
   2. Accessories
      a. Middle Atlantic Modular Power Raceway System Power Strips with 20 Amp Isolated Ground Duplex Outlet modules OR incorporated by Forecast (Quantities Per Design Each Console)
      b. OnStage Stands SMS6000 Monitor Stand PAIR (Qty: 1)
      c. Middle Atlantic RM-LCD-PNLV (Qty: 1)
      d. Rackmount keyboard and track mouse/pad (Qty: 1)
   3. FOH Control Booth Rack Furniture

a. Coordinate finish with FOH audio racks.
b. Sound Construction & Supply R5-1-ST-14D-X-V rack NO slant (Qty: 1)
c. Middle Atlantic RK12 with RKW kit (Qty: 1)
d. Furman D10-PFP (Qty: 2)

2.19 **Banquet Hall**

A. Multi-purpose Room
1. Switcher
   a. Extron IN1608 (Qty: 1)
2. Blu-Ray Player
   a. Panasonic Available Model (Qty: 1)
3. Converter
   a. AJA Hi5 (Qty: 1)
4. Twisted Pair
   a. Crestron DM-TX-200-C-2G (Qty: 1)
   b. Crestron DM-RMC-100-C (Qty: 1)
   c. Extron DTP HDMI 230 RX (Qty: 1)
5. Projection (refer to 2.16.A.1-4 for specification details)
   a. Barco RLM-W12 (Qty: 1)
   b. Barco Lens TLD+ 1.25-1.6:1 Zoom Lens (Qty: 1)
6. Screen (refer to 2.17.A.1-3 for specification details)
   a. Da-lite 12’W x 6.75’H Large Tensioned Advantage Deluxe Electrol Screen with Da-Matte front projection material and Low Voltage Controller (Qty: 1)

2.20 **WALL, FLOOR & RACK PANELS AND BOXES**

A. Indoor A/V Junction Boxes shall be Hoffman Type-1 screw cover pull boxes as detailed in the drawing set unless designated otherwise.

B. Outdoor A/V Junction Boxes shall be AFC Unifab A/V Enclosures as detailed in the drawing set unless designated otherwise.

C. Floor Boxes shall be Ace Back Stage boxes as detailed in the drawing set unless designated otherwise.

D. J-Box Panels.

E. Panel to be mounted on/in boxes, enclosures and racks in locations shown on the drawings.
1. AV Contractor to confirm size of all panels required.
2. Panels mounted on standard ganged panels to be stainless steel ganged plates.
3. Panels to be no less than 1/8” thick unless otherwise noted.
4. Rack/Enclosure panels to be flanged to add extra strength.
5. Panels shall be black with engraved lettering filled with white paint. If floor mounted appropriate floor covering shall be applied with attention to door mobility.
6. Contractor will submit panel engraving schedule and fabrication drawings for approval
7. Panels to contain components listed in Section 2.11.
8. Panels to be manufactured by one of the following manufactures:

a. Panel Authority
b. Proco
c. RCI
d. Whirlwind

2.21 **CABLE, CONTROL WIRING & TERMINATIONS**

A. Electrical conductors installed under this contract, except where otherwise specified, will be soft drawn annealed stranded copper having a conductivity of not less than 98% of pure copper.

B. Video Connectors: All primary video equipment will use crimp-on style BNC connectors. If consumer grade equipment is furnished with RCA connectors, the cable will be terminated in a crimp-on style RCA connector. It will not be acceptable to use BNC to RCA adapters for consumer grade connections.

C. Audio Connectors: Employ XLR connectors wherever possible. Wire nut "Scotchlock" connectors are not acceptable. Do not wire any cables with a polarity reversal between connectors, end of end.

D. Connectors: All cable-mounted connectors will be covered by a connector hood or will have crimp ferrules, which securely grasp the cable outer jacket. All connectors will have incorporated a mechanical means of attaching the connector to its mate. Only connectors with tarnish resistant contact surfaces will be used.

E. The Contractor will verify all connector details required for installation of equipment, including: make, model, connector sex, attachment configuration, pin-outs, and cable clamp accessories.

F. Refer to drawing AV0.00 for scope of work related to supply, installation, and termination of cable.

G. Refer to drawing AV0.00 for cables to be used.
   1. Use plenum and underground cables as required by code.

H. Refer to drawing AV0.00 for minimum cable lengths required outside of boxes.

I. Terminal blocks in junction boxes to contain:
   1. For microphone & line level cable use Barrier Strip: Entrelec M 4/6 & M 4/6PI Series Terminals, Positive Terminal (+) to be Red Part # 105 032.15 - Negative Terminal (-) to be Black Part # 105 031.14 – Shield Terminal to be Yellow+Green Part # 165 275.00 - Terminals to be mounted on DIN 3 rail.

Use the following chart for color coding video cables for use in the video production system. Please see the drawing package for cable part numbers

Signal Type	Color
HD Video	Violet
SDI Video	Blue, Light
Composite Video	Green
Bi-Level Sync/Reference	Red
Tri-Level Sync/Reference	Orange
V-TIE (multi-use)	Grey
Camera Copper Camera Cable	Black
Analog Audio	Green
Digital Audio (AES)	Yellow
Time Code	White
RF (Distributed)	White
RF (Trunk Line)	Black
Tally	Chrome
RS-232/422/485 Control	Chrome
Network 10/100/1000	Yellow
Network Facility LAN	Blue
KVM	Green, Dark
Intercom	Brown

All cable terminations will be made using the following connectors accept where direct connection is made to a device or patch bay:

Connector Type	Manufacturer & Part Number
BNC (Cable Termination)	Canare 75 Ohm
RCA (Cable Termination)	Canare 75 Ohm
BNC (Panel)	Neutrik NBB75DFI Recessed, Feed Through, Isolated
Cam Fiber (Cable Termination)	Neutrik OpticalCON to SMPTE as recommended by Camera Manufacturer
Cam Fiber (Panel)	Neutrik OpticalCON
Data (Panel)	Neutrik EtherCon RJ45 Series
XLR (Cable Termination)	Neutrik X-HD Series
XLR (Panel)	Neutrik P Series
SM Fiber Optic	Amp Metallic ST style (Flat Finish)

PART 3 - EXECUTION

3.1 GENERAL

A. Coordinate work with other trades to avoid causing delays in construction schedule.

B. Coordinate with General Contractor and verify that all dust, dirt, and debris is removed from all production rooms including Video Control and Projection rooms prior to any equipment installation.

C. Video contractor to ensure projection glass is cleaned on both sides with manufacturer approved cleaning materials.

D. Mount equipment and enclosures plumb and square. Permanently installed equipment to be firmly and safely held in place.

E. Cover edges of cable pass-through holes in chassis, racks, boxes, etc., with rubber grommets or Brady GRNY nylon grommetting. Adhesive-backed electrical tape and friction tape is not acceptable for insulating or protective purposes.

F. All rack and console dimensions must be verified against field conditions prior to fabrication and again prior to installation.

G. Inspect all racks, consoles, and enclosures prior to installation. All rough or sharp edges that may cause injury to personnel must be deburred or a permanent protective coating applied.

H. Provide ventilation adequate to keep temperature within the rack below 85 degrees Fahrenheit. Provide whisper type ventilation fan in each rack if temperature in rack rises above 85 degrees. This ventilation system must be temperature actuated.

I. Provide a non-fluorescent service lamp in the top of each equipment rack.

J. Provide blank rack-mount panels installed in all rack openings not occupied by equipment. Blank filler panels will not exceed five rack units in size. Custom rack panels shall be 1/8 inch thick aluminum, standard EIA sizes, brushed black anodized finish unless otherwise noted. (Brush in direction of aluminum grain only.) Custom connector plates (cable TV, speaker, microphone, etc.) are typically stainless steel; however, verify plate finish with the Owner. Plastic plates shall not be accepted.

K. Install rack mounted equipment with black 10-32 Phillips head machine screws.

L. Panels or equipment mounted on the rear rack rails must not block access to any front mounted components. Front mounted equipment will be given ample space to allow for access to rear connection.

M. The process of acceptance testing the System may necessitate moving and adjusting certain component parts - e.g., LCD monitors.

N. Provide security covers on non-user operated equipment having front panel controls. Install covers at the conclusion of Acceptance Testing.

O. AC Power and Grounding
   1. Coordinate final connection of power and ground wiring to racks. Hardwire power wiring directly to power contacts or internal AC receptacles to ensure uninterrupted operation.
   2. Install 3-conductor, isolated ground, 120 VAC outlets in each rack. Provide a minimum of two spare outlets in each rack. Label each outlet as to which AC circuit is feeding it and provide the same information in the circuit breaker panel.

3. Each equipment rack will have sufficient power outlets to provide an outlet for every power cord required by installed equipment or equipment designed for future installation.
4. The A/V system technical ground shall be bonded to the metal frame of all equipment racks by use of an uninsulated ground buss lug or bar mounted in each rack. When more than one rack exists, all equipment buss lugs shall be bonded to one central equipment rack buss lug. This central equipment rack buss lug shall be the only connection to the A/V system technical ground conductor. The ganging of racks together with mechanical fasteners is not an acceptable method of bonding the video system technical ground between racks.
5. Where conduits for the Sound, Communication and Video system enter equipment racks; there shall be a dielectrically insulated ground joint union (mfg. by Central Plastics, or Capitol Equipment, or RobRoy) that will isolate the conduit system from the chassis of the rack.

3.2 CUSTOM CONSOLE AND WORK SURFACE DESIGN

A. Equipment rack and console construction, loading, and mounting must be in keeping with all state and local Seismic practices and codes.

B. All consoles, work surfaces, and casework items will be rigidly constructed, and will allow for a minimum temporary additional load of 200 pounds at the edge of any horizontal surface without permanent deformation or tipping.

C. Consoles will be aluminum or steel frame construction using extruded hollow square and angle sections welded together to form the sub-frame. This sub-frame will form the structural support for all equipment loads, work surfaces and writing surfaces.

D. The aluminum or steel frame will be electrically arc welded or similar. Remove all spatter, and grind off excess weld and burrs. Prepare for shop priming by power wire brushing to remove rust. Degrease, shop prime, and finish with paint finish as specified. Protect for transport and shop/site and apply touch up paint as necessary. All arc weld hardware will be degaussed after the completion of all welding to be done on the piece.

E. All dimensions and profiles will be checked with all right-angles true and uniform. Use blank rack mount panels to confirm accuracy of mountings.

F. All attachments to viewable surfaces will be concealed. Attachments through the finish face of painted sections will be countersunk 1/4" below the surface. A resilient packing 1/16" thick will be placed over the screw before the hole is filled with a 2-part epoxy and finish sanded. When fitting panels allow clearances for paint finished. All laminate will be accurately scribed and fitted to the profiles required. Joints will be glued and screwed using frets or glue blocks where possible to ensure rigidity of the panels independently of the steel frame.

G. Perforated metalwork will be folded accurately to match adjacent profiles with 3/4" returns lapped and spot welded to form a rigid unit. Hinges and accessories will be chrome or brass, including screws.

H. All consoles will have removable rear panels for rear access to installed equipment. Removable front “kick panel” doors will also be required. All panels will remove completely during installation and service to facilitate installation work. The panels when installed will present a neat and finished appearance and will have a secure mechanical latch mechanism to avoid any rattles or buzzes.

I. Provide a suitable method of cable access through the bottom and between sections of consoles.

J. Control interfaces and panels mounted in custom fitted cutouts will provide a non-gaping interface to the surrounding surface to within a 1/32" tolerance.

K. Clearances: There will be a minimum of 1 inch clearance inside all consoles between the top equipment mounting space and the console top. This is to allow airflow above equipment mounted in the top mounting position. Provide adequate ventilation grilles to allow continuous cooling in consoles containing equipment. This should include both supply and exhaust grilles. Provide ventilation adequate to keep temperature within the rack below 85 degrees Fahrenheit. Provide whisper type ventilation fan in each rack if temperature in rack rises above 85 degrees. This ventilation system must be temperature actuated.

L. All consoles and racks will have front and rear rack rails separated by at least 24 inches. The rails will be parallel and square and will conform to EIA RS-310C for 19-inch racks.

M. Console work surfaces will be finished with a material and color selected by the Consultant and Owner. Painted and metal panels will be finished with sprayed polyester lacquer, satin finish, and color as selected by the Consultant and Owner.

N. Painting:

1. Surface Preparation: Preparation for painting will involve fine paper sanding and dusting to ensure a perfectly smooth substrate.
2. Primer: Sealer undercoat will be spray applied and sanded back using 250 grit. Touch up as needed and re-sand.
3. Finish coats will be spray finished in an appropriate spray booth with approved ventilation, humidity control, dust extraction, and lighting. Finished paint thickness will be 1 mil minimum and will be free from runs, orange peeling, blooming or other blemishes. Metal panels will have a similar finish using appropriate metal primer.

3.3 CABLING

A. Execute wiring in strict adherence to "standard broadcast practices," as excerpted from "Recommended Wiring Practices," Broadcast Audio Equipment for AM, FM, Television (5th Edition), Radio Corporation of America (RCA), Camden, N.J. 1962, and Appendix II, "Recommended Wiring Practices", Sound System Engineering, (2nd Edition), D. Davis, and performed in accordance with standard professional practice.

B. Take precautions to prevent and guard against electromagnetic and electrostatic hum. For line level audio signals, float cable shields at the output of source device. Shields not connected to be folded back over cable jacket and covered with heat-shrink tubing. Do not cut off unused shields.

C. Exercise care in wiring; damaged cables or equipment shall not be accepted. Isolate cables of different signals or different levels; and separate, organize, and route to restrict channel crosstalk or feedback oscillation. Keep wiring separated into groups for microphone level circuits, line level circuits, loudspeaker circuits, power circuits, video circuits and control/data circuits.

D. Wiring entering equipment racks will be run directly to equipment. Use of splices or connectors to extend cabling to equipment will not be accepted. All signal wiring will be continuous and unbroken from connector plate/chassis to chassis/patch panel. Use of intermediate connections for inter rack cables is not acceptable. Use of splices or connectors to extend cabling to equipment is not acceptable.

E. Make joints and connections with rosin-core solder or with mechanical connectors approved by the Consultant. Where crimp-on terminations are used, trim cable using manufacturer recommendations and crimp properly with ratchet type tools.

F. If required, tally, GPI, or relay wiring entering equipment racks may connect via terminal blocks (Cinch 140 - 142 Series) or on Entrelec blocks; terminal blocks will be fully exposed, labeled, and mounted on 3/4 inch plywood board painted flat black. If Qty of terminals is too numerous to fit in rack, terminal blocks may be located on wall mounted plywood terminal board adjacent to rack. Mounting boards to be 3/4 inch A/C grade or hardwood plywood painted flat black. Terminal board wiring to meet the same requirements as internal rack wiring described below.

G. Connect audio cable to active components through screw terminal connections whenever available. Make connections to speaker transformers with properly sized closed end connectors crimped with factory approved ratchet type tool. Wire nut or "Scotchlock" connectors are not acceptable. Do not wrap audio cable splices or connections with adhesive backed tape.

H. Connect loudspeakers electrically in phase, using the same wire color code for speaker wiring throughout the project.

I. Wiring and connections will be completely visible and labeled in rack.

J. All power cables will run on the left side of the equipment rack, as viewed from the rear. All other cables will be run on the right side on the equipment rack, as viewed from the rear. Where signal cabling and any cabling types carrying power must cross, they will do so at right angles. Vertical wiring will be run with a bundling and support system, to maintain a clear and organized appearance.

K. Horizontally routed wiring to equipment will be neatly tied in manageable bundles with cable lengths cut to minimize excess but still allow ready access for service and testing. Provide horizontal support bars if cable bundles sag

L. For equipment mounted on slides, additional service loops will be provided to accommodate the full range of travel of the slides. This includes all power, ground, control and signal cables. All cables, accept power, must be wrapped in flexible expandable sleeving to avoid snagging or entanglement.

M. For short/thin chassis patch bays, cables are to be integrated in a “z” style service loop to allow the patch bay to be “hinged” outward from the front of the rack for maintenance.

N. Neatly bundle excess AC power cables from rack-mounted equipment with plastic cable ties. Rack wiring to be bundled with plastic cable ties or lacing twine. Electrical tape and adhesive backed cable tie anchors are not acceptable. Cable tie and lacing installation will be accomplished using hand tools specifically designed to apply proper tension to the cable tie, and to cut it off flush with no protruding sharp edges. Cable ties will not be applied with excessive force, which may damage or deform sensitive and fragile cables.

O. All cables in cabletrays shall be neatly installed with maintaining separation of the different cable types.

P. Required production room cable paths and lengths must be predetermined especially in instances where timing is a factor. The information that is essential for the implementation of this task is as follows:
   1. Site Survey
   2. Floor and Ceiling Plans
   3. Elevation Design
   4. Equipment List
   5. Video and Audio Schematics
   6. Cable Trays and Conduits

Q. Screw Connections: Only insulated crimp on spade terminals will be used for application to barrier strips. Multiple gang lugs or ring lugs are not acceptable for this purpose.

1. This is only applicable to stranded conductor wires. Solid conductors will be attached directly to the barrier strip.
2. All conductors will be stripped prior to installation underneath screws on terminals. Provide crimp lugs on stranded control cables, solid conductor wire will not require crimp lugs on individual conductors. All screw terminated solid conductors will be wrapped in the same direction as screw rotation during tightening.

R. Multi-conductor Cables: Follow a uniform application of color codes for multi-conductor cables throughout the Facility. Where there are unused conductors or pairs in a cable assembly, they can be insulated as a group, left long enough for future termination, and folded into the connector hood. Where this is impractical, they may be folded back along the outer jacket of the cable and covered with heat-shrinkable tubing.

S. Multipin Connectors: Where jumpers are indicated between pins of the same connector, they will be installed internal to the connector shell and will not have any cable number designations applied to the jumper.

3.4 LABELING

A. General

1. The attachment method for equipment identification plates will be designed for permanency unless otherwise described. All labels will be protected prior to installation, and will not be installed if damaged or scratched. Follow manufacturer's recommended procedure for surface preparation, which must be free of any dust, dirt or film. Wiping with a manufacturer-approved solvent is required. If a label is in a place that might be susceptible to damage, it will be protected with a layer of clear plastic, 1/16" or thicker, taped down. Internal labels will be replaced only if they become illegible. External labels will be replaced if they become scratched or marred.
2. On black lamicoid panels or pushbuttons, letters shall be white; on stainless steel or brushed natural aluminum plates, or light-colored pushbuttons, letters shall be black.
3. Embossed labels are not acceptable.
4. Mount labels in a neat, plumb and permanent manner except where indicated.
5. Text heights will be as follows:
   a. Rack designation labels will have 1” high block sans serif text.
   b. Equipment labels will be 3/4” high block sans serif text.
   c. Operator Control labels will be 1/4" high block sans serif text, this may be adjusted to fit available space.
   d. Panel labels will be 1/8” high block sans serif text.
   e. Patchbay, Cable and Connector labeling will be 10 point block sans serif text, this may be adjusted to fit available space.

B. Equipment Labels

1. Provide engraved lamicoid labels on the front and rear of active equipment mounted in racks. Front mounted equipment labels for the Production Suite video monitor wall monitors are to be mounted with Velcro. Equipment labels to have one line of engraving, giving the schematic reference of the device, and/or its production function, i.e. “VTR #4”, “PA-29A”.
2. Unless equipment manufacturer has clearly labeled functions, provide an engraved label over each user-operated control that describes the function or purpose of the control.
3. If the manufacturer provides a protected labeling strip such as those used for switcher control panels and patch bays, then patch/routing point labels may be typed clearly on 80 pound paper stock.

4. Individual patch bay point labels to include alphabetic representation of patch bay row and numeric representation of patch point in row, as well typical device I/O abbreviation.

C. Cable Labels

1. Cables and wiring to be logically, legibly and permanently labeled for easy identification. Labels on cables to be adhesive strip type covered with clear heat-shrink tubing. Factory stamped heat shrink tubing may be used in lieu of the adhesive strip style label. Hand-written or self-laminating type labels are not acceptable.
2. Wiring designations to use a unique alpha code to define the signal type and a unique non-repeating numeric code to define the cable.
3. Locate the cable designation at the start and end of each cable run and within 2 inches of the point of termination or connection. For cable runs that have intermediate splice points, the cable shall have the same designation throughout with an additional suffix to indicate each segment of the run. Actual cable designation assignments to be determined by Contractor. Add cable designation codes to system schematic drawings included with Project Record Drawings.
4. Provide adhesive labels on the rear of equipment where cables attach to indicate the designation of the cable connected at that point.

3.5 ACCEPTANCE

A. Provide a pre-commissioning systems report to the Consultant two weeks prior to the scheduled systems commissioning proving all systems to be in full compliance. Report shall include test results, date of each test, pertinent conditions such as control settings, etc., and test equipment employed. In addition, submit written notification that the installation has been completed in accordance with the requirements of the Contract Documents, and is ready for acceptance testing.

B. Acceptance testing will include operation of each major system and any other components deemed necessary. Contractor will assist in this testing and provide required test equipment. Contractor will provide at least two technicians familiar with installation, available for the entire testing period (day and night), to assist in tests, adjustments, and final modifications. Tools and materials required to make any necessary repairs, corrections, or adjustments will be furnished by the Contractor. The Contractor will keep a running list of all acceptance tests performed and submit a final copy of the results with the closeout submittals as listed in Part 1.6. Testing process is estimated to take 3 days up to 16 hours per day and may require multiple crews / shifts.

C. During all consultant walkthroughs, the project manager will be present.

D. If during acceptance testing it becomes evident that further adjustment or work may be required to bring the system into compliance, the Contractor will continue to work until the system is acceptable at no additional charge to the contract price. If approval is delayed because of defective equipment, poor installation, or failure of equipment to meet the requirements of these specifications, the Contractor will pay for additional time and expenses of the Consultant at the Consultant's standard rate in effect at that time, during any extension of the acceptance testing period. The Contractor will provide rental or loaner equipment to make the system operational in critical cases of equipment failure prior to contract completion.

E. Provide three portable UHF business band radios for use during acceptance testing. Radios should have a transmission range sufficient to cover entire project. Radios to include rechargeable batteries and re-charger along with "holster" for wearing on belt. Radios to be available for duration of testing process, including any follow-up visits required prior to final acceptance. Confirm that radio frequencies used are not in use elsewhere on project site.

F. Verify the following before beginning actual tests and adjustments on the system:

1. Electronic devices are properly grounded.
2. Powered devices have AC power from the proper circuit and hot, neutral, and ground conductors are connected correctly.
3. Insulation and shrink tubing are present where required.
4. Dust, debris, solder, splatter, etc. is removed.
5. Cable is dressed, routed, and labeled; connections are consistent with regard to polarity.

G. Grounding System Tests.

1. Measure and record the DC resistance between the technical ground in any equipment rack or console and the main technical system ground. Resistance should be 0.1 ohms or less. Provide this information in pre-commissioning report to Consultant.
2. When the technical grounding system is complete, the Contractor will be required to demonstrate that this system is in no way bonded to the building safety grounding system except at the main service entry panel. With the power to the central distribution panel removed, the Contractor will disconnect the A/V system technical ground conductor from the main ground buss bar at the central distribution panel. At this point, an open circuit greater than 1 megaohm should be measurable between the technical ground and the building safety ground. The Contractor will measure and insure that the utility ground and the technical ground are in no way bonded together. Provide this information in pre-commissioning report to Consultant.

H. Cabling Tests.

1. Submit printed test reports proving the systems to be in full compliance to the consultant as part of the pre-commissioning systems report.
2. After installation, and before termination, all wiring and cabling shall be checked and tested with a megohmeter to ensure there are no grounds, opens, or shorts on any conductor or shields.
3. Verify all audio lines are wired to maintain proper continuity and polarity.
4. Perform TDR measurements on all triax and coax video cables.
5. Perform sweep tests on all triax and coax cables with a spectrum analyzer. When documenting the results of these tests, include the calculated loss based on length of the video cable measured with the TDR. Correct cabling for any field readings that differ more than 20% from the calculated loss.
6. Test all CAT5E cables to verify they meet full CAT5E specifications. Tests will use a certified tester that will confirm bandwidth, cable distance, and error and bit rate detection.
7. Optical Fiber Cable Testing
   a. Test all fiber optic cable strands for continuity and performance before and after the cables are pulled and terminated.
   b. Test link attenuation of all installed multimode fiber optic strands after splicing and termination in accordance with ANSI/TIA/EIA-568-B.1, Section 11.3.
      1) One direction with an optical light source and an optical power meter.
      2) Test at two wavelengths to account for attenuation differences due to wavelength:
      3) 850 nm and 1300 nm for multimode strands
      4) 1310 nm and 1550 nm for singlemode strands
      5) Test multimode strands in accordance with ANSI/EIA/TIA-526-14A, Method B, One Reference Jumper.
      6) For multimode strands, wrap reference jumper around mandrel to remove high-order mode transient losses as specified in ANSI/TIA/EIA-568-B.1, Section 11.3.3, Table 11-15.
      7) Test Singlemode strands in accordance with ANSI/EIA/TIA-526-7, Method A.1, One Reference Jumper.

8) The total attenuation budget for each fiber cable length (end-to-end) shall equal the allowed attenuation for the fiber (0.2 dB per km times the length in km) plus the attenuation for each splice and connector. For example, a cable length of 3 km with 1 splice and 2 connectors would have an attenuation budget of (3 km x 0.2 dB/km) + (2 x 0.2 dB) = 1.2 dB.

c. Test all installed fiber optic strands after splicing and termination that have a length greater than 500 feet with an OTDR (Optical Time-Domain Reflectometer) per TIA/EIA-455-61:

1) End-to-end bi-directional signature trace with fault finding, connection point reflection, fiber bend, pressure point location, etc.
2) One wavelength, 1300 nm for multimode strands.
3) One wavelength, 1550 nm for singlemode strands.
4) Multimode fiber connector losses ≤ 0.5 dB at 850 nm
5) Singlemode fiber connector losses ≤ 0.2 dB at 1310 nm
6) Multimode fiber splice losses ≤ 0.3 dB at 850 nm
7) Singlemode fiber splice losses ≤ 0.2 dB at 1310 nm
8) Localized attenuation shall not exceed 0.5 dB at any point

d. Fibers that are broken or damaged shall be replaced at no cost to the owner and replaced fiber optic cables shall be re-tested.

I. System Tests.

1. The following procedures shall be performed by the Consultant:
2. Audio fidelity Verification: Driving the system with pink noise and measuring the response from 40 Hz to 16k Hz. Digital Signal Processing will be used to adjust the response of the system (s) to fit the requirements of the space.
3. Video Signal Verification: From all source inputs (for cameras, character generators, video tape units, etc.) through all VDAs, A/D and D/A converters, processors, switchers, etc., to all signal destinations. Verification of correct signal timing for each source via each path will be made using standard test patterns. Each processing device will be checked; the signal will pass through the device in the no processing mode such that unity luminance, chrominance, and signal timing and phasing conditions are achieved.

a. Video.

1) 1 Volt (peak to peak) throughout video signal path
2) S/N (peak to RMS), unweighted, DC to 4.2 MHz: 55 dB minimum.
3) Crosstalk, unweighted, DC to 4.2 MHz: 45 dB minimum.
4) Frequency Response: + 0.5 dB to 4.2 MHz.
5) Line and Field Tilt: 2% maximum.
6) Differential Gain: 2% maximum.
7) Differential Phase: 2 degrees maximum.
8) Signal level: within plus or minus 0.5 dB.
9) System timing: Sync coincidence within 20 nanoseconds.
10) Color timing: Within 1/2 degree at 3.58 MHz.

b. Digital Video.

1) Verify strength of data signal throughout video signal path.
2) Verify validity of data timing signals.
3) Verify receiving device clock recovery
4) Report input data errors

5) Report transport layer errors

c. RGB-HV.

1) 0.707 to 1.0 volt maximum throughout RGB video signal path.

2) to 1.414 volt maximum throughout HV sync signal path

4. Control functions shall be checked for proper operation, from controlling devices to controlled devices.
5. Adjust, balance, and align equipment for optimum quality and to meet the manufacturer's published specifications. Establish and mark normal settings for each level control, and record these settings, in the "System Operation and Maintenance Manual".
6. Installed and loose equipment shall be inventoried for correct Qty.
7. Any other test on any piece of equipment or system deemed appropriate by Consultant.
8. The omission of a description of a device, function, signal path, or test in this document shall not exempt the Contractor from responsibility for checking all devices and signal paths for appropriate compliance with Industry Performance Standards and making corrections necessary to bring system(s) into compliance with the applicable standards.

3.6 TEST EQUIPMENT

A. Provide the following equipment on site for final acceptance testing. Test equipment to be available for the entire period through final system acceptance. Prior to start of testing, provide a list to the Consultant of test equipment make and model numbers that will be used.

1. Megohmeter.
2. Multimeter: Measurement range, DC to 20,000 Hz, 100 mV to 300 V, 10 ma to 10A. Acceptable: Fluke 75.
3. Dual-trace oscilloscope: 20 MHz bandwidth, 1 mV/cm sensitivity.
4. Impedance Meter: Capable of testing audio lines at three frequencies, minimum, between 250 Hz and 4k Hz. Measurement Range: 1 ohm to 100k ohms.
5. Audio Oscillator: bandwidth 20 Hz to 20k Hz +1 dB at 0 dBm output. Output to be balanced. Oscillator to include adjustable output level.
6. Time Domain Reflectometer.
7. Optical Time Domain Reflectometer.
8. HD-SDI Generator
9. HD-SDI Analyzer/Waveform/Vectorscope
10. CAT5E/6 Cable Tester
11. HD/SD portable color monitor

3.7 INSTRUCTION OF OWNER PERSONNEL

A. Upon completion of the installation of the specified AV systems, and prior to any facility events, provide designated operating personnel training on the equipment operation. This training will be performed at the site by the Contractor’s and the manufacturer's education staff.

B. The System Reference and Service Manuals must be complete and on-site prior to the time of the first instruction.

C. Coordinate schedule of instruction with the Owner subject to availability of Owner’s personnel. This may require scheduling instruction during weekends or evenings.

D. Training will be provided in a series of classes to operations personnel to review all aspects of operation and maintenance of the system. Follow-up sessions to better enhance the operator's ability to expand or maximize the system will be made available.

E. The system training will include 2 day(s) of technical training covering the explanation of the system, including documentation, configuration, interfacing and diagnostics. Provide training of the video system operators and maintenance personnel as follows:

1. System Overview: Explanation of system includes documentation, configuration, interfacing and basic diagnosis.
2. Operator Training General: Basic training in the use of system devices including powering, timing and general operation of overall system.
3. Operator Training Specific: Advanced training in use of system devices including terminal equipment, signal routing, switching, recording, cameras systems and audio operations. Training also includes overview of clip server and graphics system operation. Where specified, training will be by manufacturer representatives.

F. Manufacturer training and commissioning is specified in this document. The Contractor will cover expenses such as flight, hotel, rental car, and meals and include them as part of the bid pricing.

END OF SECTION

YY–XX	FLOOR OR CEILING MNTD PANEL
YY–XX	WALL PANEL
D–XX	DATA OUTLET
PH–XX	PHONE OUTLET
A	CEILING SPEAKER (TYPE A)
TYPE X	SURFACE MOUNTED LOUDSPEAKER

YY

FB	FLOOR BOX
WP	MULTIPLE SIGNALS PANEL
IC	INTERCOM PANEL
VC	VOLUME CONTROL
SPK	SPEAKER OUTPUT PANEL
WPV	VIDEO PANEL
FBV	VIDEO FLOOR BOX
JBS	SPEAKER LEVEL JUNCTION BOX
JBV	VIDEO LEVEL JUNCTION BOX
JBM	MIC LEVEL JUNCTION BOX
JBL	LINE LEVEL JUNCTION BOX

TP–XX	AC FLOOR DUPLEX
TP–XX	AC FLOOR QUAD
TP–XX	AC WALL DUPLEX
TP–XX	AC WALL QUAD
TP–XX	AC SPECIAL

NOTE: ALL TECH POWER OUTLETS TO UTILIZE ISOLATED GROUND RECEPTACLES.

WP–01 BOX TYPE/NUMBER

FILL	CONDUIT	DESTINATION

FB–TP TP–XX	FB–XX	TECH POWER OUTLET MOUNTED IN FB–TP FLOOR BOX
TP–XX	FB–XX	TECH POWER OUTLET MOUNTED IN FB–XX FLOOR BOX.

1 PLAN SYMBOLS

SCALE: NTS

THIS SECTION DEFINES THE DIFFERENT LEVELS AND TYPE OF AUDIO AND VIDEO SIGNALS THAT WILL BE A PART OF THE COMPLETE SOUND, COMMUNICATIONS AND VIDEO SYSTEM. IT IS IMPORTANT THAT EACH GROUP BE INSTALLED IN CONDUIT DISCREET FROM OTHER GROUP LEVELS COMMON JUNCTION BOXES/WIRE RACEWAYS THAT COMBINE DIFFERENT CABLES SHALL NOT BE USED. ANY WIRING THAT IS CLASSIFIED WITHIN A GROUP CAN BE COMBINED IN A CONDUIT CARRYING OTHER WIRING THAT IS IN THE SAME GROUP. WHEN A COMBINATION PANEL IS SPECIFIED THE CONDUITS WILL ENTER INTO THE BOX WITH THE INTENT OF MAINTAINING THE SEPARATION AS MUCH AS POSSIBLE. IN BRINGING THE CONDUITS INTO THE BOX THE METAL WALLS OF THE BOX WILL SUPPLY SOME ADDITIONAL SHIELDING. THE DIFFERENT LEVELS OF AUDIO AND VIDEO SIGNALS ARE DEFINED AS FOLLOWS:

GROUP A – MICROPHONE AND OTHER SENSITIVE WIRING (0 TO 100 MILLIVOLTS)

GROUP B – LINE LEVEL WIRING. (100 MILLIVOLT TO 10 VOLT)

GROUP C – LOUDSPEAKER AND CONTROL WIRING (10 VOLT TO 70 VOLT)

MINIMUM CONDUIT SEPARATION TABLE

	GROUP A	GROUP B	GROUP C
GROUP A	ADJACENT	6"	12"
GROUP B	6"	ADJACENT	12"
GROUP C	12"	12"	ADJACENT
DIMMER CONTROLLED LIGHTING	24"	12"	6"
SCR CONTROLLED DEVICES	36"	12"	6"
220/440V FEEDER CIRCUITS	72"	72"	72"
ALL OTHERS (PLUMBING, HEAT ETC.)	12"	12"	12"

3 MINIMUM CONDUIT SEPARATION DISTANCES

SCALE: NTS

1. THE EXACT LOCATION OF ALL AUDIO/VIDEO DEVICES SHALL BE COORDINATED WITH THE OWNER, AND AUDIO/VISUAL SYSTEM DESIGNER. THE LOCATIONS SPECIFIED HERE ARE BASED ON PRELIMINARY FACILITY DESIGNS.
2. THE AUDIO/VIDEO SYSTEM EQUIPMENT RACK LOCATION WILL REQUIRE SPACE TO ACCOMMODATE RACKS AS INDICATED IN DRAWINGS. THESE RACKS WILL BE PLACED SIDE BY SIDE. A MINIMUM OF 36" (THIRTY SIX INCHES) OF CLEARANCE IS REQUIRED BOTH IN FRONT OF AND IN BACK OF THE EQUIPMENT RACKS. ACCESS MUST BE PROVIDED TO THE REAR OF THE EQUIPMENT RACKS.

4 GENERAL NOTES

SCALE: NTS

MINIMUM CABLE LENGTHS OUTSIDE OF JUNCTION BOXES

BOX PREFIX	BOX SIZE CONDITION	LENGTH OUTSIDE OF BOX
FB	N/A	2 FEET
FBV	N/A	2 FEET
IC	N/A	2 FEET
VC	N/A	2 FEET
DIS	N/A	2 FEET
JBS	LESS THAN 24"X24"	4 FEET
JBS	24"X24" OR LARGER	20 FEET
JBV	LESS THAN 24"X24"	4 FEET
JBV	24"X24" OR LARGER	20 FEET
JBL	N/A	20 FEET
JBM	N/A	20 FEET

REFER TO JUNCTION BOX SCHEDULE FOR SPECIAL CONDITIONS.

5 MINIMUM CABLE LENGTHS OPUTSIDE OF BOXES

SCALE: NTS

1. REFER TO TABLE FOR ALL SEPARATION DISTANCES.
2. THERE ARE MINIMUM CONDUIT SEPARATIONS THAT MUST BE MAINTAINED BETWEEN CONDUITS CARRYING WIRE OF DIFFERENT GROUPS. IT IS IMPORTANT TO NOTE THAT WHILE DIFFERENT SIGNALS MAY EXIST ON A WALL PANEL, IT IS NOT APPROPRIATE TO RUN MORE THAN ONE GROUP IN A CONDUIT.
3. IT WILL BE NECESSARY AT TIMES FOR CONDUITS OF DIFFERENT GROUPS TO CROSS IN CLOSE PROXIMITY. THE CONDUIT PATHS MUST BE DESIGNED TO CROSS AT 90 DEGREES TO EACH OTHER.
4. THE CONDUIT PATHS OF THE SOUND, COMMUNICATION AND VIDEO SYSTEMS (GROUPS A,B,C, AND D) SHOULD NOT BE ROUTED NEAR POWER TRANSFORMERS, SCR DIMMERS, POWER CONTROL EQUIPMENT, HEAVY CURRENT SWITCHGEAR, FLUORESCENT BALLAST, MOTORS OR ANY OTHER EQUIPMENT THAT MAY BE A SOURCE OF INTERFERENCE (SEE CONDUIT SEPARATION DISTANCES).
5. THE MINIMUM CONDUIT SIZE SHALL BE 3/4", THE CONDUIT SHOULD BE SIZED FOR 40% FILL OR LESS IF REQUIRED BY PREVAILING CODE. THE DESIGN SHALL REQUIRE PULL LINES TO BE LEFT IN ALL THE CONDUIT BY THE ELECTRICAL CONTRACTOR. THE CONDUIT DESIGN SHALL INCORPORATE ADDITIONAL PULL BOXES TO MATCH THE PULL TENSIONS OF THE WIRING TO BE INSTALLED. THE ELECTRICAL CONTRACTOR SHALL DETERMINE FROM THE CABLE SPECIFICATIONS THE APPROPRIATE PULL TENSIONS AND LUBRICANT TO ENSURE THAT THE CABLE INSULATION WILL NOT BE ABRADED OR CUT IN INSTALLATION.
6. IN A SITUATION WHERE THERE WILL EXIST A HEAVY CURRENT DEMAND IN ADJACENT CONDUITS, OR WHERE THERE WILL BE LONG PARALLEL RUNS, THERE WILL NEED TO BE ADDITIONAL SEPARATION BETWEEN THOSE CONDUITS AND THE SOUND, COMMUNICATION AND VIDEO CONDUITS.
7. SIGNAL CONDUITS SHOULD BE MECHANICALLY AND ELECTRICALLY CONNECTED TO THE RECEPTACLE BOXES. THESE CONDUITS AND BOXES SHOULD CONNECT TO THE BUILDING SAFETY GROUNDING SYSTEM.
8. ALL SYSTEMS WIRING SHOULD BE IN CONDUIT UNLESS APPROVED BY THE CONSULTANT.
9. THE USE OF PVC CONDUIT IS PERMITTED FOR UNDER SLAB PATHWAYS FOR ALL CABLE TYPES EXCEPT MIC LEVEL CABLES (TYPE E). ALL MIC LEVEL UNDER SLAB CONDUIT MUST BE RGS (RIGID GALVANIZED STEEL) AND THE CONNECTIONS COATED WITH A WATER PROOF SEAL. ALL ABOVE SLAB CONDUIT SHALL BE EMT.
10. WHERE CONDUITS FOR THE SOUND, COMMUNICATION AND VIDEO SYSTEM ENTER EQUIPMENT RACKS; THERE WILL BE A DIALECTICALLY INSULATED GROUND JOINT UNION (MFG. BY CAPITOL OR CENTRAL PLASTICS) THAT WILL ISOLATE THE CONDUIT SYSTEM FROM THE CHASSIS OF THE RACK.
11. THE SOUND SYSTEM TECHNICAL GROUND IS BONDED TO THE METAL FRAME OF ALL EQUIPMENT RACKS AND TO THE UNINSULATED GROUND BUSS BAR OR GROUNDING LUG MOUNTED IN EACH RACK. WHEN MORE THAN ONE RACK EXIST TOGETHER, ALL RACK GROUNDING LUGS WILL BE BONDED TO ONE CENTRAL EQUIPMENT RACK LUG. THIS CENTRAL EQUIPMENT RACK GROUNDING LUG WILL BE THE ONLY CONNECTION TO THE SOUND SYSTEM TECHNICAL GROUND CONDUCTOR. THE GANGING OF RACKS TOGETHER WITH MECHANICAL FASTENERS IS NOT AN ACCEPTABLE METHOD OF BONDING THE SOUND SYSTEM TECHNICAL GROUND BETWEEN RACKS.
12. THE RACK FRAMES WILL BE INSULATED FROM THE FLOOR AND SO LOCATED TO PREVENT COMING INTO CONTACT WITH ANY SAFETY GROUNDED ITEMS DURING OPERATION.
13. DUPLEX RECEPTACLES WILL HAVE AN INSULATED GROUND CONDUCTOR CONNECTED TO THE ISOLATED GROUND BUSS BAR THAT WILL BE LOCATED IN THE APPROPRIATE BRANCH CIRCUIT PANELBOARD.
ALL CONDUIT TO BE SIZED BY ELECTRICAL CONTRACTOR IN ACCORDANCE WITH ALL APPLICABLE FEDERAL AND LOCAL CODES.

6 GUIDELINES FOR THE INSTALLATION OF CONDUIT

SCALE: NTS

TYPE	MANUFACTURER	PART NUMBER	CABLE APPLICATION	DESCRIPTION	NOMINAL OD (IN)	SIGNAL GROUP
A	N/A	N/A	Speaker	1 PR #10 AWG, THHN Stranded Pair	0.21	C
B	N/A	N/A	Speaker	1 PR #12 AWG, THHN Stranded Pair	0.18	C
C	West Penn	227	Speaker	1 PR #12 AWG, Stranded, Twisted, PVC Jacket	0.317	C
D	Belden	9451	Line Level Audio	1 Shielded PR #22 AWG, Stranded, Twisted, PVC Jacket	0.138	B
E	Belden	9451	Mic Level Audio	1 Shielded PR #22 AWG, Stranded, Twisted, PVC Jacket	0.138	A
F	Belden	7810A	Antenna	50 Ohm Coax, #10 AWG, RG-8	0.405	B
G	Belden	9311	Antenna	50 Ohm Coax, #20 AWG, RG-58	0.193	B
H	Belden	1694A	Digital Video	75 Ohm, Precision Video Cable, #18 AWG	0.275	D
J	Belden	7789A	Digital Video	75 Ohm, 5 Conductor, #23 AWG	0.539	D
K	Belden	9116	MATV	Series 6, #18 AWG, MATV CABLE	0.270	D
L	Belden	9011	MATV	Series 11, #14 AWG, MATV CABLE	0.400	D
M	Liberty Cable	Cresnet	Control	2PR, (1)PR #22AWG, Twisted-Shielded, (1) PR #18 AWG Twisted, Overall PVC Jacket	0.282	D
N	Belden	9406	Intercom	2PR, #24 AWB, Twisted, Shielded, Overall PVC Jacket	0.28	D
P	West Penn	270	Control	6 Conductor, #22 AWG, Stranded, Jacketed	0.217	D
Q	West Penn	234	LV Power	3 Conductor, #18 AWG, Stranded, Jacketed	0.184	D
R	Belden	1419A	Control-RS422	2 Conductor, #24 AWG, Stranded, Overall Shield	0.248	D
T	Gepco	HDP221	Camera Electrical	(2) 16 AWG Stranded TC	0.315	B
U	Belden	1700A	CAT5e Data	4 PR, #24 AG, BONDED PAIR, UTP, CAT5e, RJ45 Comp.	0.204	D
W	Corning	006E8F-31131-29	Single Mode Fiber	Six Strand Singlemode Fiber	0.240	D
X	Belden	1696A	Digital Audio	1 PR #22 AWG, Stranded, Twisted, PVC Jacket	0.234	B
Y	Corning	006S8F-31180-29	Multi-Mode Fiber	Six Strand Multimode Fiber	0.240	D
Z	Belden	1871A	Phone/Data Cable	25 Pair, Phone/Data Cable, Plenum	0.435	D
U6S	Belden	2412F	CAT6 Data Shielded	4 PR, #23 AWG, Shielded UTP, CAT6, RJ45 Comp.	0.29	B

2 CABLE SCHEDULE

SCALE: NTS

1. EACH TECHNICAL POWER CIRCUIT (TP–XX) IS PART OF AN OVERALL TECHNICAL GROUNDING SYSTEM. REFER TO AV6.00 FOR COMPLETE DETAILS ON THE TECHNICAL GROUNDING SYSTEM.
2. ALL TECHNICAL POWER CIRCUITS WILL REQUIRE AN ISOLATED GROUND RECEPTACLE AND A DEDICATED ISOLATED GROUND CONDUCTOR. A SEPARATE EQUIPMENT GROUND CONDUCTOR SHOULD BE RUN AS REQUIRED BY CODE.
3. ISOLATED GROUND AND NEUTRAL CONDUCTORS SHOULD BE SIZED PER CODE, AND BE EQUIVALENT OR GREATER THAN THE CURRENT CARRYING CONDUCTORS. FOR RUNS LONGER THAN 150', ISOLATED GROUND CONDUCTORS SHOULD BE UPSIZED TO #10AWG MINIMUM.
4. EACH TECHNICAL POWER CIRCUIT SHOULD UTILIZE DEDICATED NEUTRAL AND ISOLATED GROUND CONDUCTORS. MULTIPLE CIRCUITS SHOULD NOT SHARE NEUTRAL OR ISOLATED GROUND CONDUCTORS. MULTIPLE CIRCUITS MAY SHARE EQUIPMENT GROUND CONDUCTORS AS ALLOWED BY CODE.

7 TECHNICAL POWER AND GROUNDING REQUIREMENTS

SCALE: NTS

		Description	Electrical Contractor	General Contractor	AV Contractor
Power	1	Furnish and install all AC power circuits, receptacles (except those in the AV Racks), & standard power panels. TP circuits to utilize isolated ground receptacles with a dedicated isolated ground conductor unless specifically noted otherwise.	X		
	2	Furnish and install AC power connections and circuits within audio–video equipment racks. – Provide an appropriately sized J–box at the top of each rack with power circuit cabling terminating in 24" pigtails. – Label each circuit with circuit number.			X
	3	Furnish technical power sequencing panel (TP–01 and TP–02; Refer to plans and specifications for exact model number)	X		
	4	Install technical power sequencing panel.	X		
	5	Furnish Audio Disconnect Switch (refer to plans and specifications for exact model number)	n/a		
	6	Install Audio Disconnect Switch	n/a		
Conduit and Boxes	7	Furnish and install all conduit (with measured pull string), gang boxes, pull boxes, wall panel back boxes, pull string and raceway required for the sound system. Clearly label with permanent marker all boxes and conduits listed above.	X		
	8	Furnish and install cable tray in audio equipment room.	X		
	9	Furnish and install cable raceway in control booth.	X		
	10	Furnish speaker backcans and floorbox backcans to installing contractor.			X
	11	Install speaker backcans and floorbox backcans (provided by contractor above)	X		
Low Voltage Cabling	12	Furnish and install all audio and video cable. – All pairs of wire must be individually labeled at both ends. – All cable pulls shall be continuous, without splices, unless specifically noted. – Provide excess cable at each end of run as required (length to be determined by audio–video contractor).			X
	13	Verify all conduit and cable fills for accuracy. – Provide to the installing contractor a run list of all wire pulls, including wire numbers.			X
	14	Prepare and forward to the Audio Contractor a complete run list of the cable numbers as the cable is installed. – Cables to be logically, legibly and permanently labeled for easy identification. – The Audio Contractor will utilize these cable numbers in preparing his own labels that will comply with Part 3.1 Section H 4 of this specification			X
	15	Termination of all low voltage cables related to the audio–video systems.			X
Structural	16	Furnish and install support structure for loudspeaker clusters/arrays. – Support structure to consist of I–beams or similar attached to building steel. – Coordinate exact requirements (final weights and locations) with Audio Contractor.		X	
	17	Install all speakers and speaker clusters. – The Audio Contractor must have their speaker rigging and support frames approved by a licensed structural engineer.			X
	18	Furnish mounting brackets / backing for wall–mounted TV's to installing contractor.			X
	19	Install mounting brackets and/or backing (provided by contractor above) for wall–mounted TV"s. Coordinate exact locations and heights with on–site conditions.		X	
Millwork	20	Furnish all millwork at the front–of–house control booth including half–height walls, countertop, and cabinetry. Refer to drawings for exact specifications.		X	
	21	Provide and install all loudspeaker grills and/or covers with exceptions noted below. – Refer to architectural drawings for extent of grill cloth – Exceptions: Coaxial ceiling speakers with self–contained grills.		X	
Other	22	Furnish and install choir mics above the choir. Microphone cable shall be non–twisting.			X
	23	Provide a contact closure to the audio–video racks for emergency muting of audio system in Fire Alarm Condition (if required by local code).	X		

8 DIVISION OF RESPONSIBILITIES

SCALE: NTS

ACOUSTIC DIMENSIONS

DALLAS I NEW YORK I SAN DIEGO I UK

15508 Wright Brothers Drive
Addison, Texas 75001
972.239.1505

www.acousticdimensions.com

NEW WORSHIP FACILITIES
FIRST BAPTIST CHURCH OF HIGHLAND PARK
6801 SHERIFF ROAD
LANDOVER, MARYLAND 20785

No.	Description	Date
1	BID SET	2-11-2011
2	VIDEO PRODUCTION REDESIGN	10-07-2013

STAMP

Sheet Title

AUDIO VIDEO
NOTES AND LEGENDS

Scale

Project Number

Sheet Number

AV0.00

© 2011 Acoustic Dimensions

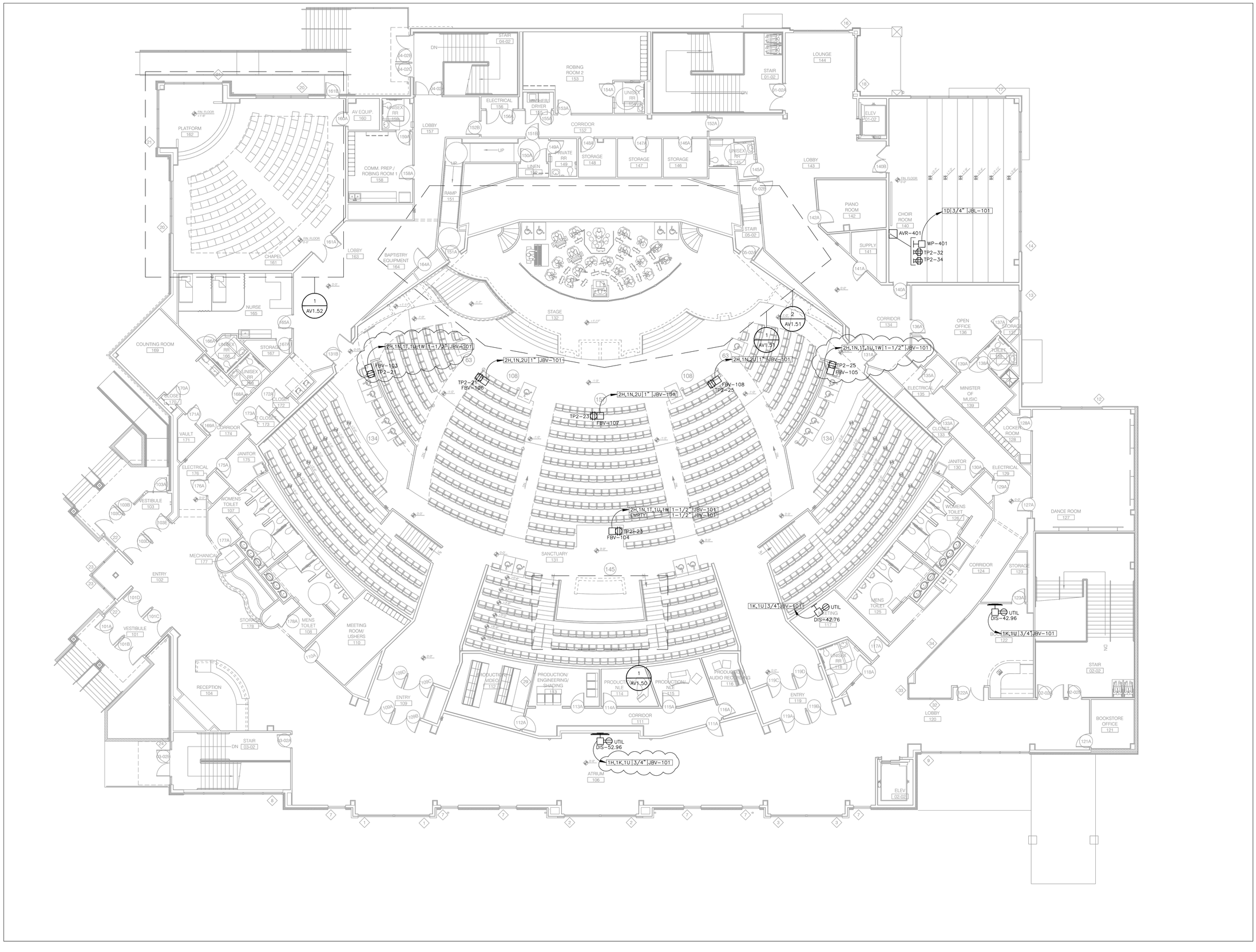

1 GROUND LEVEL PLAN VIEW

SCALE: 1/8" = 1'-0"

ACOUSTIC DIMENSIONS

DALLAS I NEW YORK I SAN DIEGO I UK

15508 Wright Brothers Drive
Addison, Texas 75001
972.239.1505

www.acousticdimensions.com

NEW WORSHIP FACILITIES
FIRST BAPTIST CHURCH OF HIGHLAND PARK

6801 SHERIFF ROAD
LANDOVER, MARYLAND 20785

No.	Description	Date
1	BID SET	2-11-2011
2	VIDEO PRODUCTION REDESIGN	10-07-2013

STAMP

Sheet Title

AUDIO/VIDEO SYSTEMS
PLAN VIEW
GROUND LEVEL

Scale

AS NOTED

Project Number

Sheet Number

AV1.20

© 2011 Acoustic Dimensions

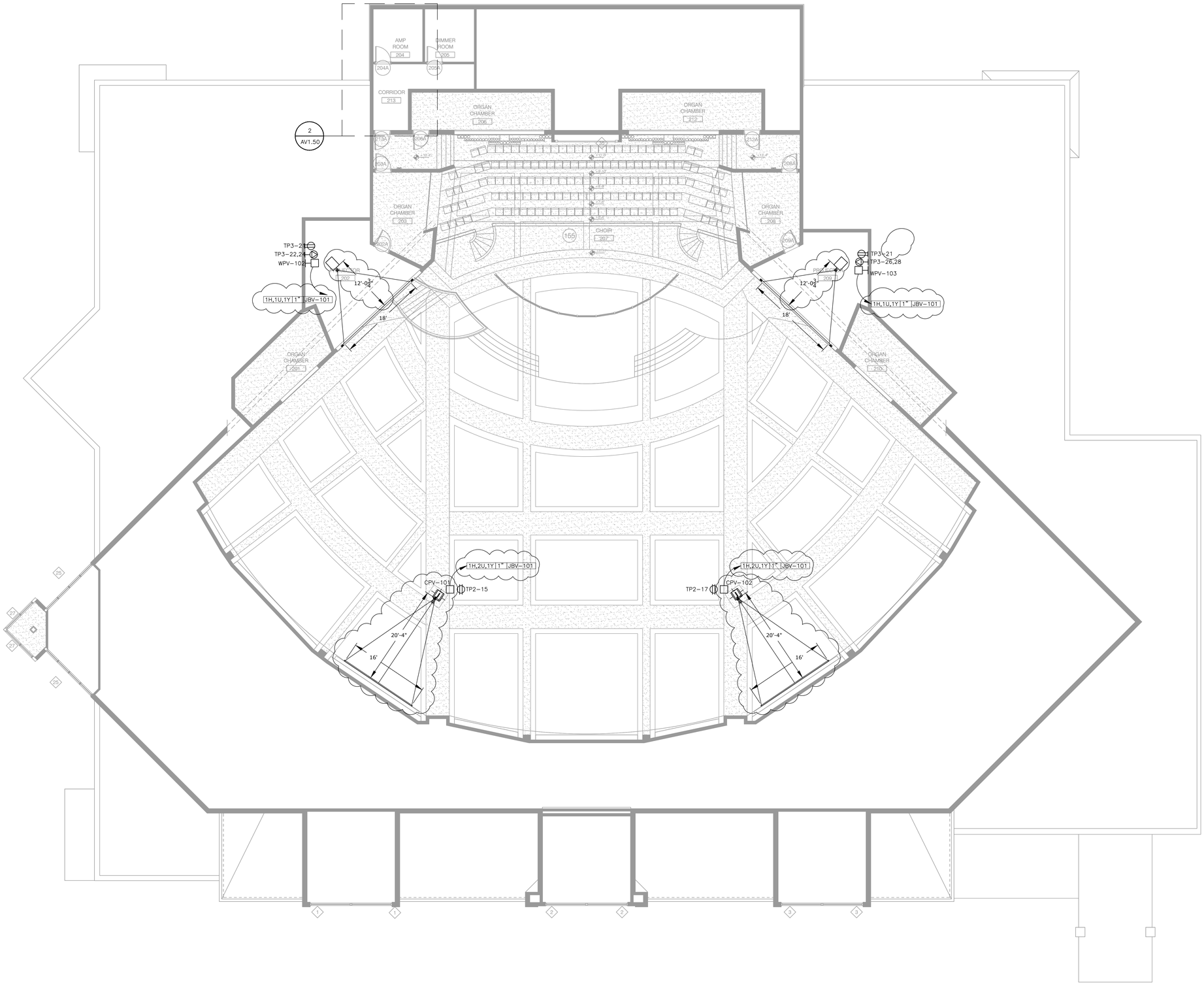

1 MEZZANINE LEVEL PLAN VIEW

SCALE: 1/8" = 1'-0"

ACOUSTIC DIMENSIONS

DALLAS I NEW YORK I SAN DIEGO I UK

15508 Wright Brothers Drive
Addison, Texas 75001
972.239.1505

www.acousticdimensions.com

NEW WORSHIP FACILITIES
FIRST BAPTIST CHURCH OF HIGHLAND PARK

6801 SHERIFF ROAD
LANDOVER, MARYLAND 20785

No.	Description	Date
1	BID SET	2-11-2011
2	VIDEO PRODUCTION REDESIGN	10-07-2013

STAMP

Sheet Title

AUDIO/VIDEO SYSTEMS
PLAN VIEW
MEZZANINE LEVEL

Scale
AS NOTED

Project Number

Sheet Number

AV1.30

© 2011 Acoustic Dimensions

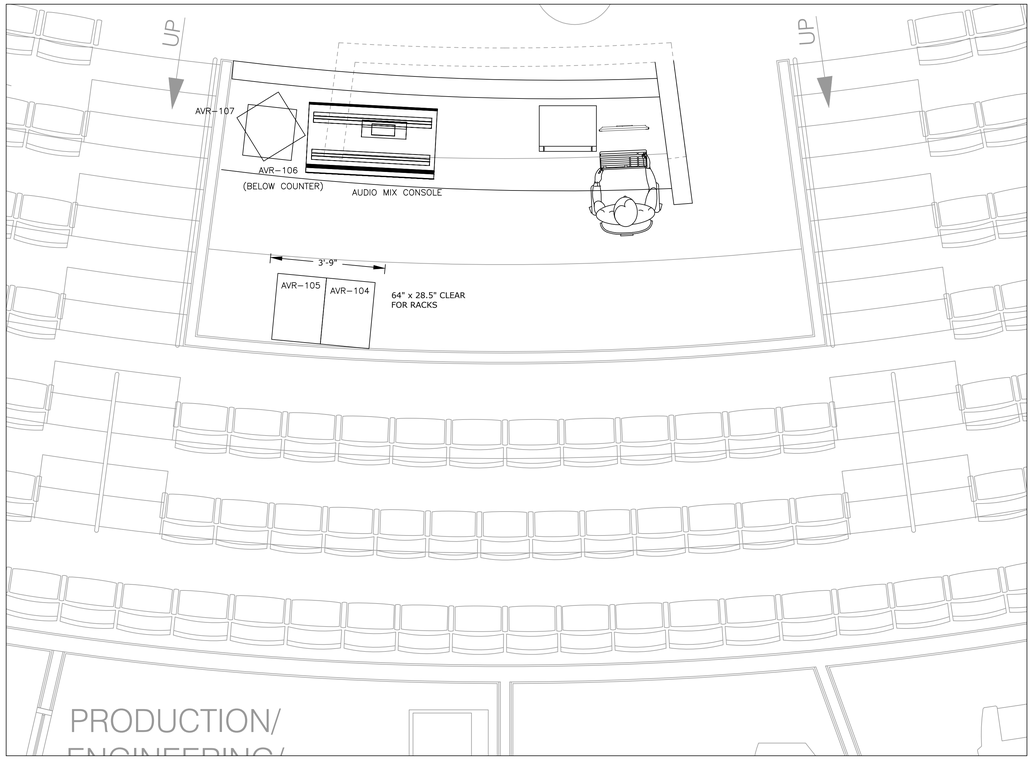

1 SANCTUARY CONTROL BOOTH EQUIPMENT LAYOUT
SCALE: 1/2" = 1'-0"

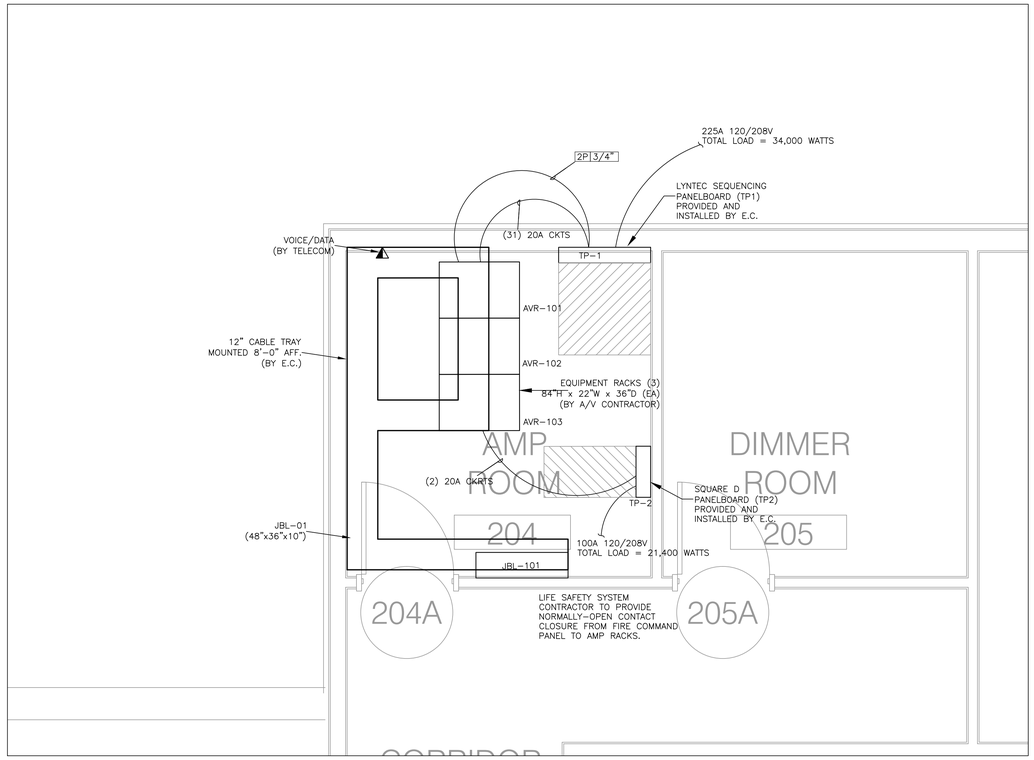

3 SANCTUARY AMP ROOM LAYOUT
SCALE: 1/2" = 1'-0"

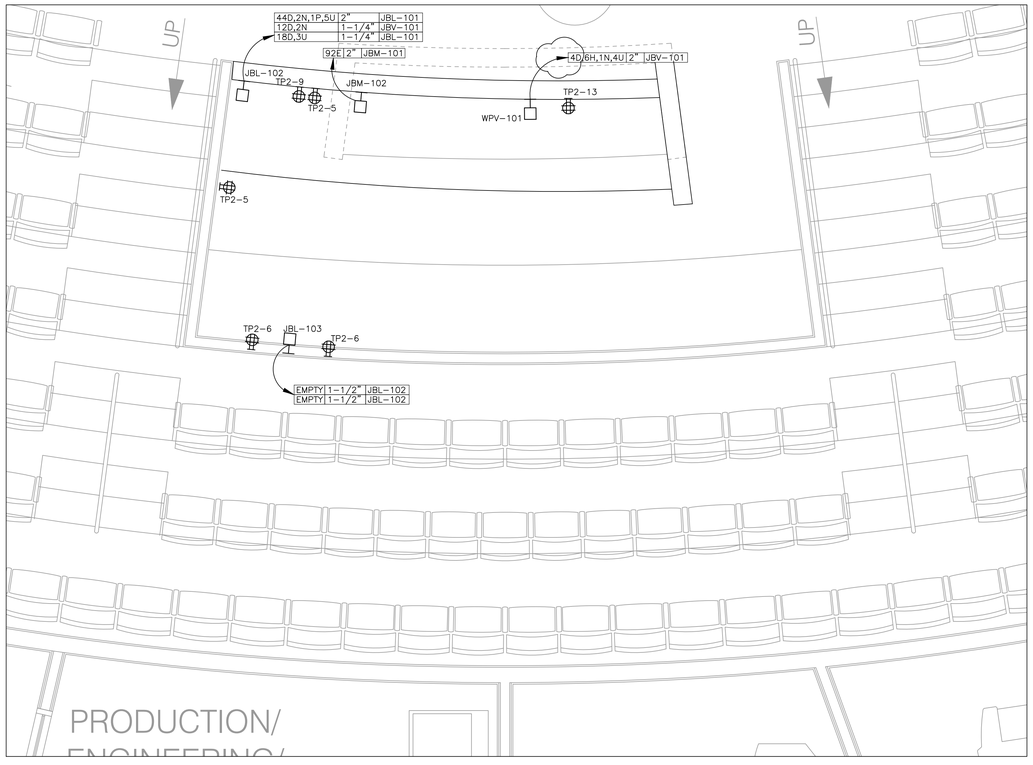

2 SANCTUARY CONTROL BOOTH CONDUIT
SCALE: 1/2" = 1'-0"

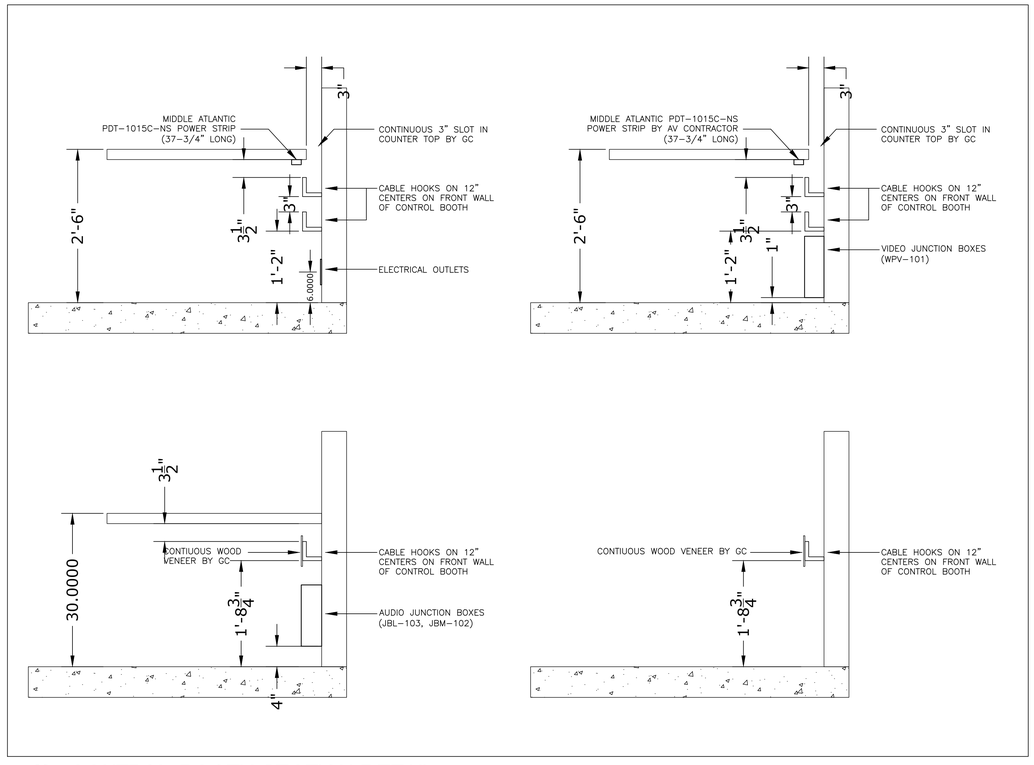

4 CONTROL BOOTH SECTION DETAIL
SCALE: 1" = 1'-0"

ACOUSTIC DIMENSIONS
DALLAS I NEW YORK I SAN DIEGO I UK
15508 Wright Brothers Drive
Addison, Texas 75001
972.239.1505
www.acousticdimensions.com

NEW WORSHIP FACILITIES
FIRST BAPTIST CHURCH OF HIGHLAND PARK
6801 SHERIFF ROAD
LANDOVER, MARYLAND 20785

No.	Description	Date
1	BID SET	2-11-2011
2	VIDEO PRODUCTION REDESIGN	10-07-2013

STAMP

Sheet Title
AUDIO/VIDEO SYSTEMS
ENLARGED PLAN VIEWS
CONTROL BOOTH AND AMP ROOM

Scale
AS NOTED

Project Number

Sheet Number
AV1.50

© 2011 Acoustic Dimensions

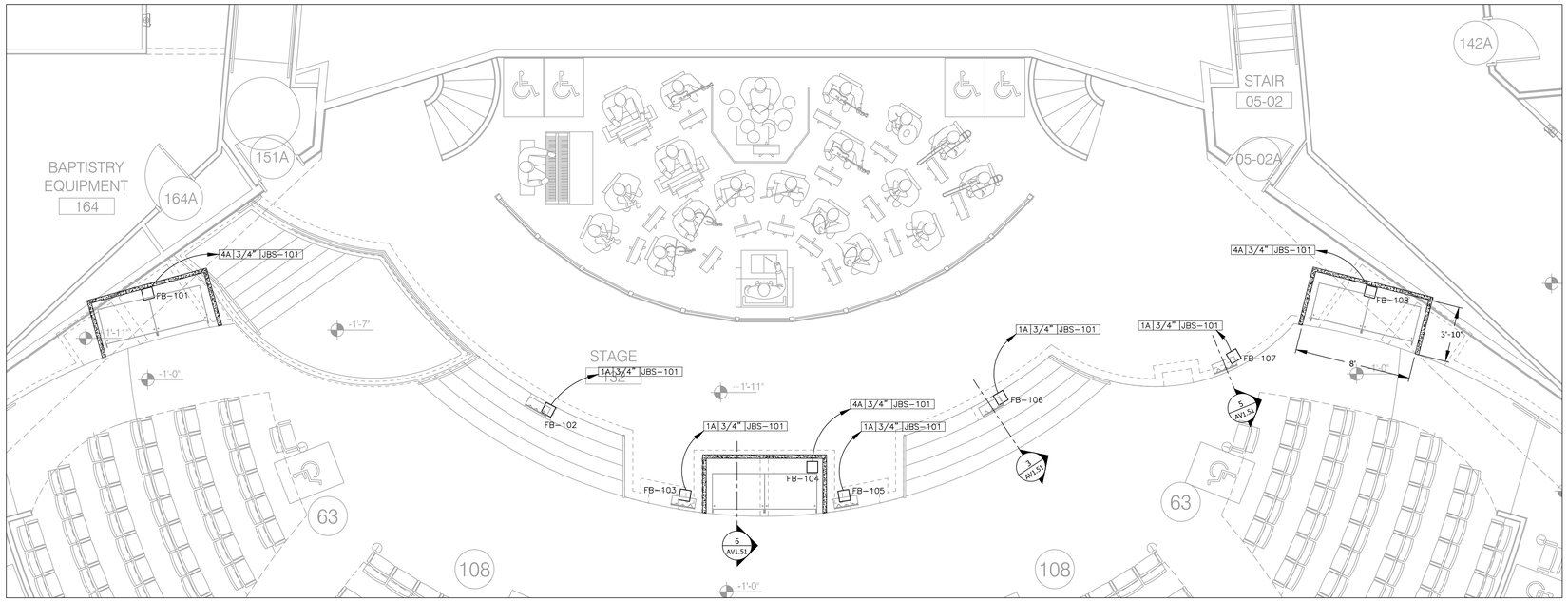

1 UNDERSTAGE AV CONDUIT PLAN
SCALE: 1/4" = 1'-0"

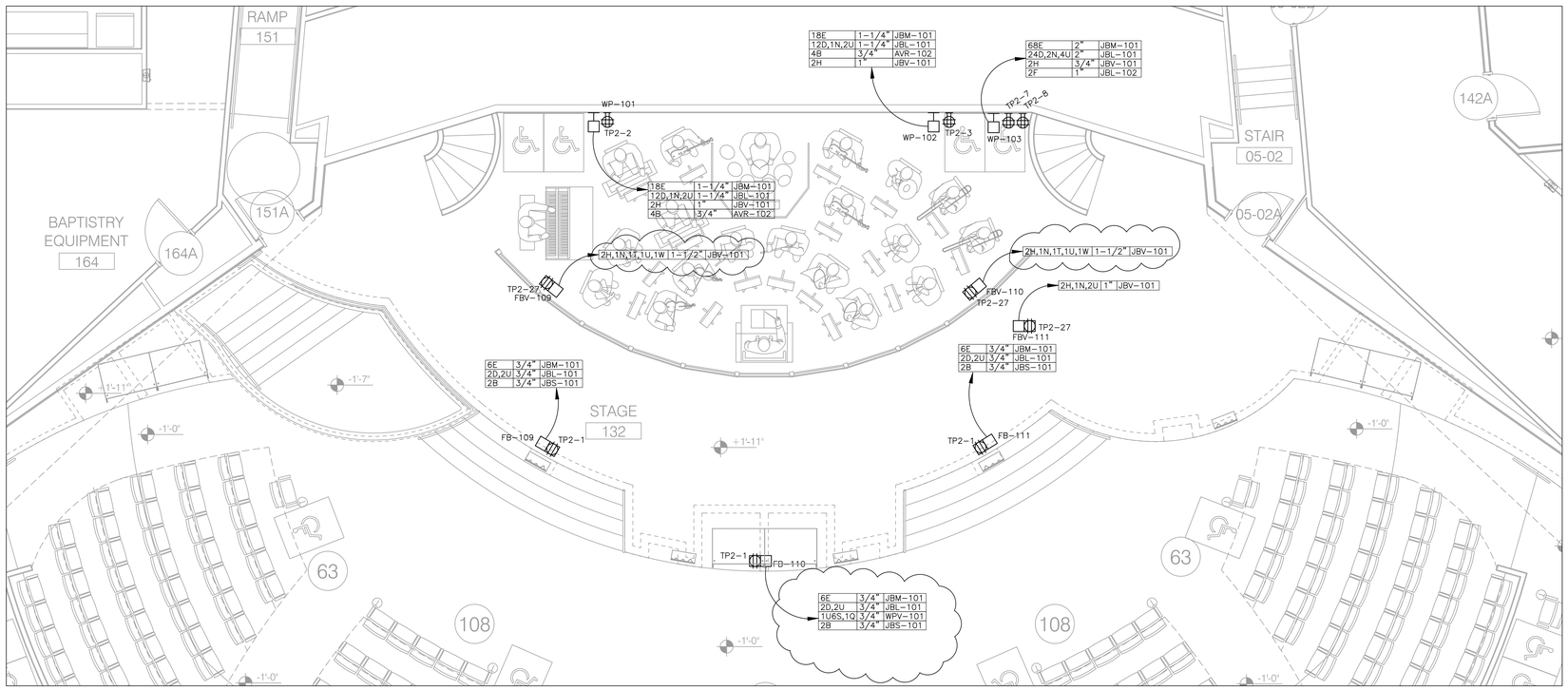

2 STAGE AV CONDUIT PLAN
SCALE: 1/4" = 1'-0"

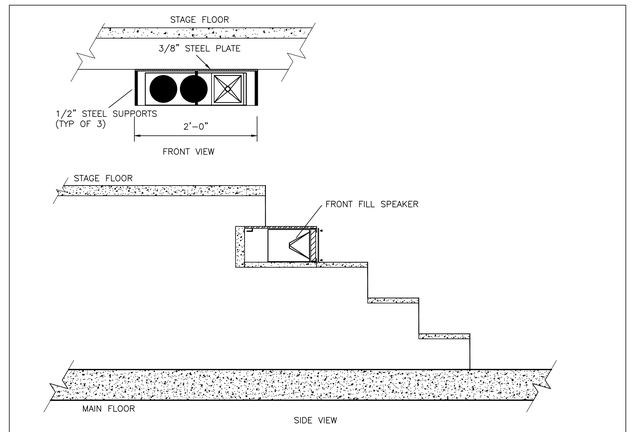

3 SANCTUARY STAIR SECTION AT FRONTFILL SPEAKER
SCALE: 1" = 1'-0"

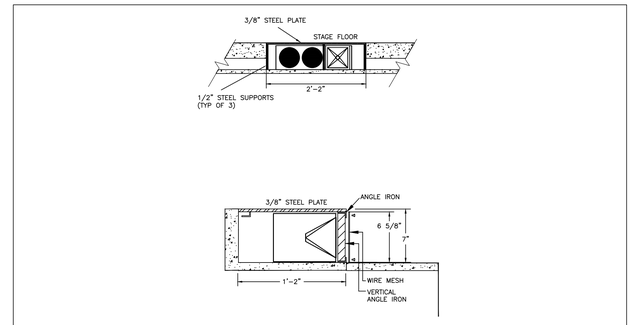

4 SANCTUARY STAIR DETAIL AT FRONTFILL SPEAKER
SCALE: 1-1/2" = 1'-0"

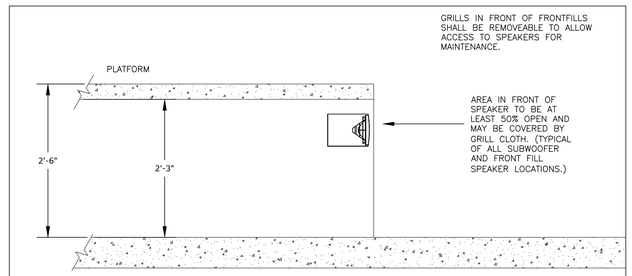

5 SANCTUARY STAGE SECTION AT FRONTFILL SPEAKER
SCALE: 1" = 1'-0"

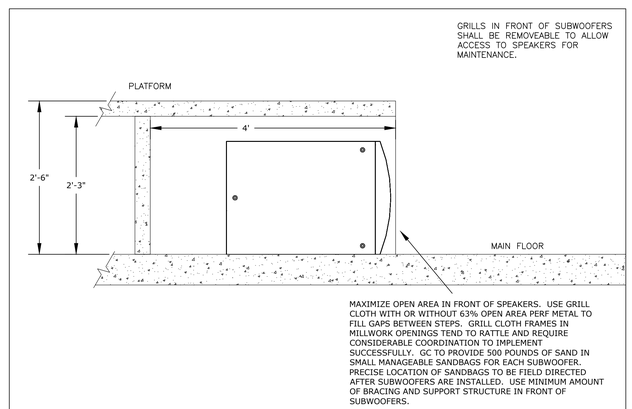

6 SANCTUARY STAGE SECTION AT SUB SPEAKER
SCALE: 1" = 1'-0"

ACOUSTIC DIMENSIONS
DALLAS I NEW YORK I SAN DIEGO I UK
15508 Wright Brothers Drive
Addison, Texas 75001
972.239.1505
www.acousticdimensions.com

NEW WORSHIP FACILITIES
FIRST BAPTIST CHURCH OF HIGHLAND PARK
6801 SHERIFF ROAD
LANDOVER, MARYLAND 20785

No.	Description	Date
1	BID SET	2-11-2011
2	VIDEO PRODUCTION REDESIGN	10-07-2013

STAMP

Sheet Title
AUDIO/VIDEO SYSTEMS
ENLARGED PLAN VIEWS
SANCTUARY STAGE

Scale
AS NOTED

Project Number

Sheet Number
AV1.51

© 2011 Acoustic Dimensions

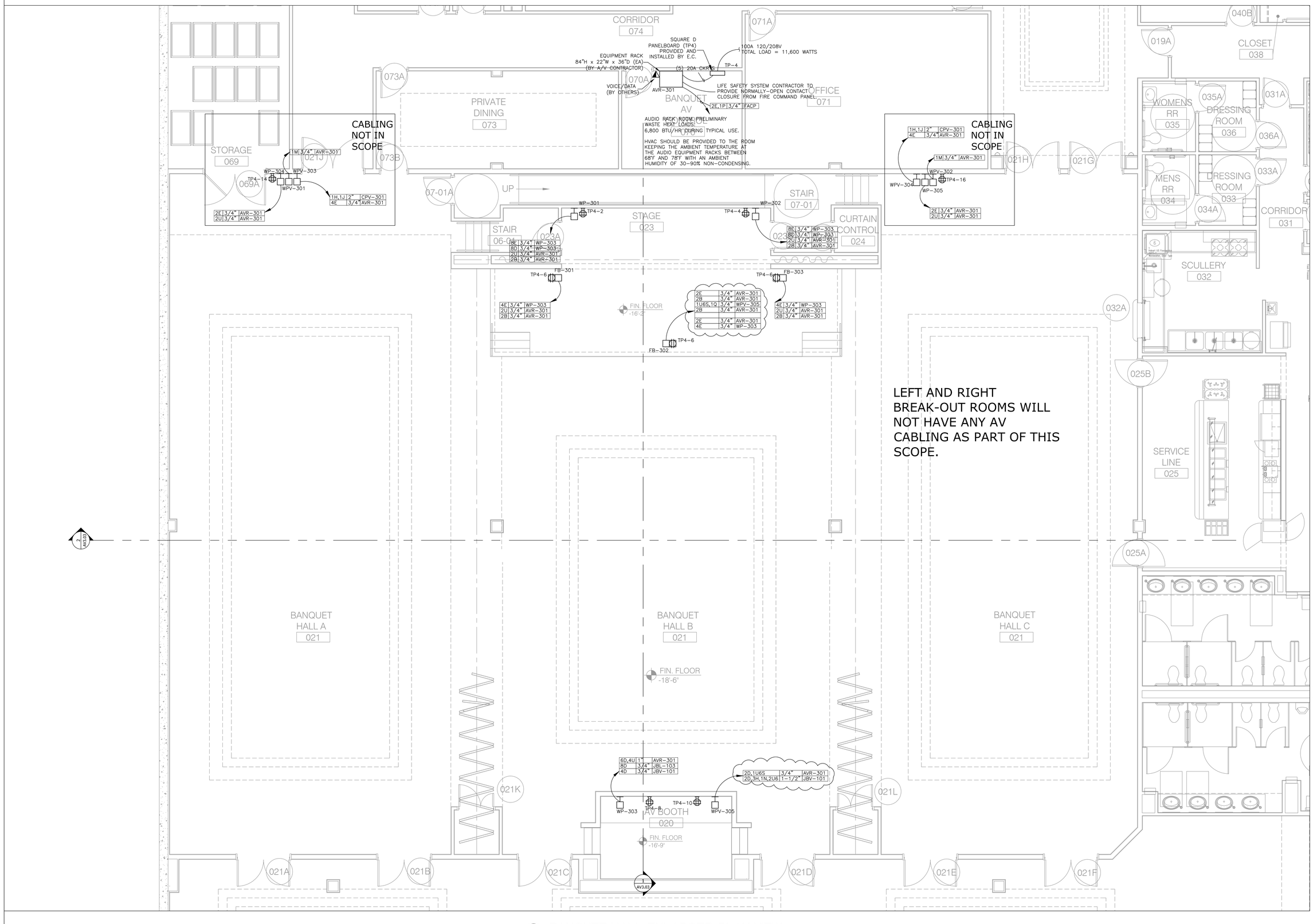

1 BANQUET HALL ENLARGED PLAN VIEW
SCALE: 1/4" = 1'-0"

ACOUSTIC DIMENSIONS

DALLAS | NEW YORK | SAN DIEGO | UK

15508 Wright Brothers Drive
Addison, Texas 75001
972.239.1505
www.acousticdimensions.com

NEW WORSHIP FACILITIES
FIRST BAPTIST CHURCH OF HIGHLAND PARK

6801 SHERIFF ROAD
LANDOVER, MARYLAND 20785

No.	Description	Date
1	BID SET	2-11-2011
2	VIDEO PRODUCTION REDESIGN	10-07-2013

STAMP

Sheet Title

AUDIO/VIDEO SYSTEMS
ENLARGED PLAN VIEWS
BANQUET HALL

Scale

Project Number

Sheet Number

AV1.53

© 2011 Acoustic Dimensions

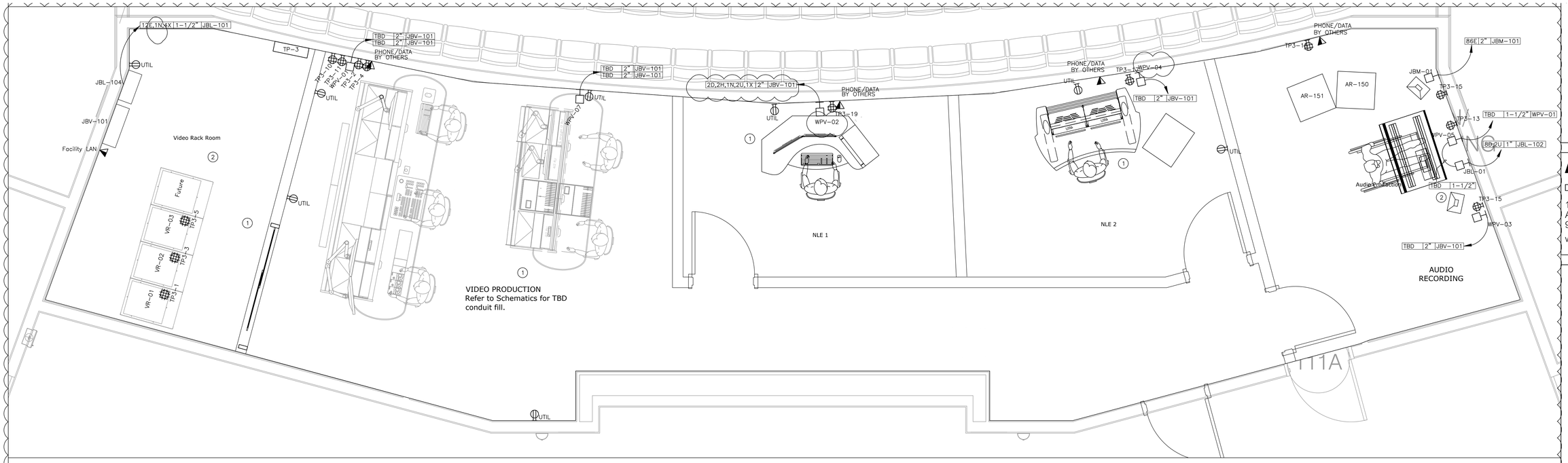

1 VIDEO PRODUCTION EQUIPMENT LAYOUT

SCALE: 1/2" = 1'-0"

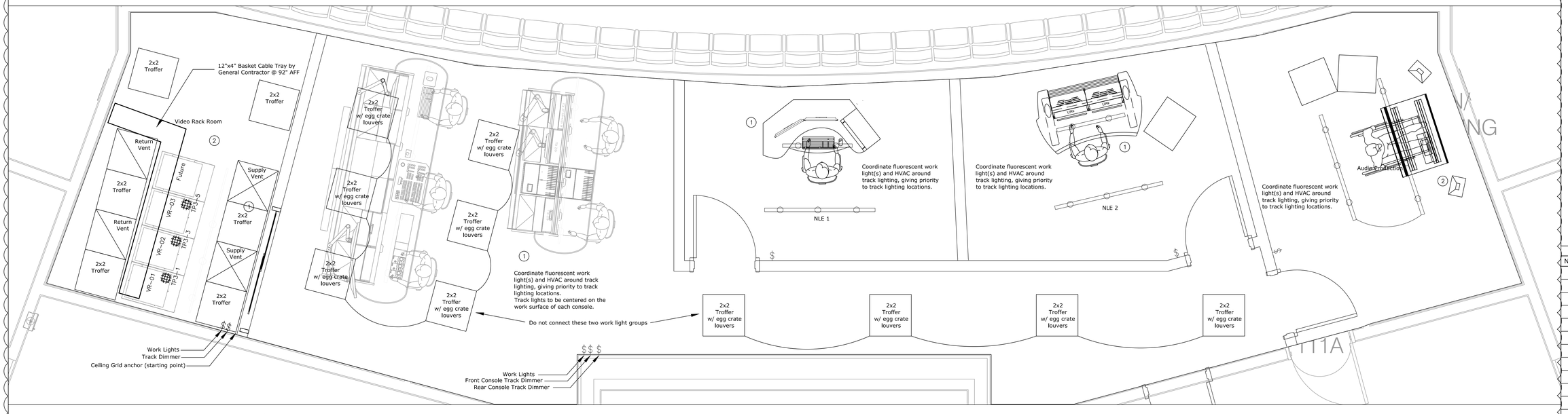

2 VIDEO PRODUCTION POWER/LIGHTING LAYOUT

SCALE: 1/2" = 1'-0"

GENERAL NOTES FOR ALL VIDEO/AUDIO ROOMS:

WINDOWS
Walls will be absent of any windows except those specified in the AV Drawings.

LIGHTING:
Noiseless dimmers are required.

Track lighting will have individual dimmers per track/row except where noted in drawings by connecting line.

FIXTURE (OR **APPROVED** EQUIVALENT):
QTY: 23 Con-Tech CTL9020
23 lights will be distributed throughout the video production suite of rooms as noted in AV Drawings. Alternate fixtures must be approved, meeting these requirements: Ellipsoidal or narrow spot fixtures with barn doors or extended snoot that does not allow direct view of bulb from 45 degree angle, and does not leak light from the sides or back of fixture. Inside of snoot and/or barn doors must be flat black.

Fluorescent work lights are required in each AV Room. All AV rooms with the exception of the rack room require ½"x½" silver egg crate louvers on fluorescents. All lighting to be on utility circuits.

(1)

DESIGN NOTES FOR VIDEO PRODUCTION AND NLE ROOMS:

PAINT:
Interior wall colors for all video production and edit suites to be flat neutral gray, and have a reflective value equal to 18% gray or munsell n5.
Formula:
A. Behr Ultra flat (1 Gallon: 128oz)

	CLRNT	BL	CL	FL	KKL
Oz.	3	0	0	7	
384th oz.	208	176	64	32	

ACOUSTICS:
(refer to acoustics report if available):
use 100% fiberglass ceiling tiles equal to Armstrong Optima (white).

Walls will have minimum 50% coverage with fabric wrapped acoustic wall panels (pre-fab or custom) from 3' aff to door height. No panels behind Video Monitor Wall.

FLOORING:
Static free carpet in production.
Medium to dark colors, architect to coordinate pattern/color with owner.

(2)

DESIGN NOTES FOR VIDEO ENGINEERING RACK ROOM:

PAINT:
The video rack room shall have white walls.

FLOOR FINISHES:
Rack room: static free vct - solid white or light gray color without specks, lines or other patterns.

(3)

DESIGN NOTES FOR AUDIO PRODUCTION:

PAINT:
Audio suite wall color and acoustic panel color is at the discretion of the owner - does not require gray)

ACOUSTICS:
Refer to acoustics report for partition types and finishes.

FLOOR FINISHES:
Recording: wood, carpet, and cork, or a combination. (coordinate with owner)

3 CONCEPTUAL DESIGN NOTES

SCALE: N.T.S.

1 Entire suite was redesigned.

ACOUSTIC DIMENSIONS
DALLAS | NEW YORK | SAN DIEGO | UK
15508 Wright Brothers Drive
Addison, Texas 75001
972.239.1505
www.acousticdimensions.com

NEW WORSHIP FACILITIES
FIRST BAPTIST CHURCH OF HIGHLAND PARK
6801 SHERIFF ROAD
LANDOVER, MARYLAND 20785

No.	Description	Date
1	BID SET	2-11-2011
2	VIDEO PRODUCTION REDESIGN	10-07-2013

STAMP

Sheet Title
VIDEO PRODUCTION
PLAN VIEW LAYOUT

Scale

Project Number

Sheet Number
AV1.54

© 2011 Acoustic Dimensions

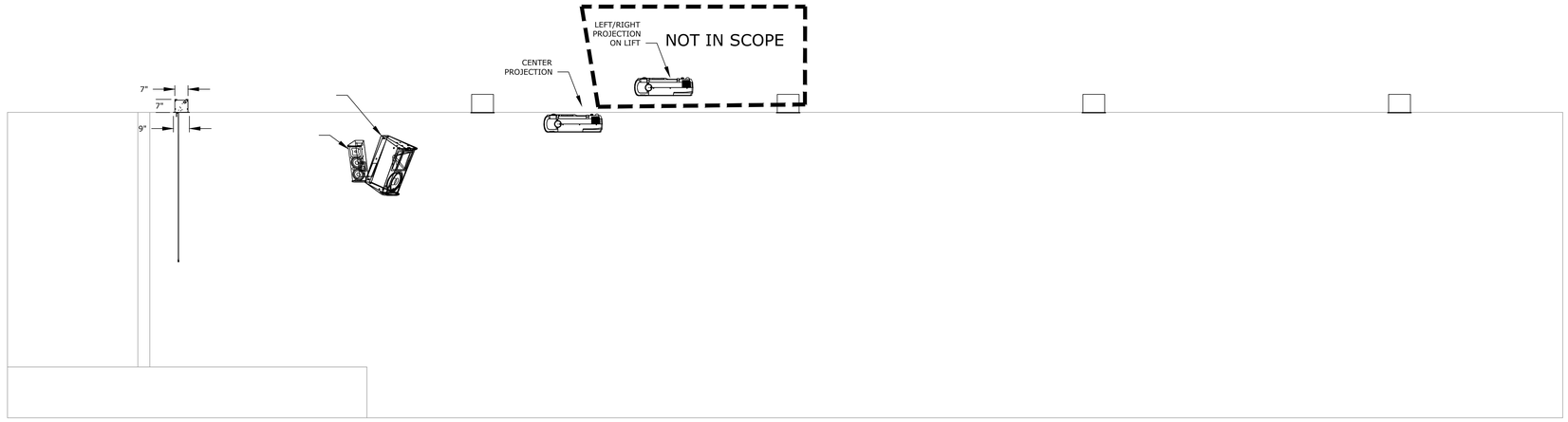

1 BANQUET HALL LONGITUDINAL SECTION
SCALE: 3/8" = 1'-0"

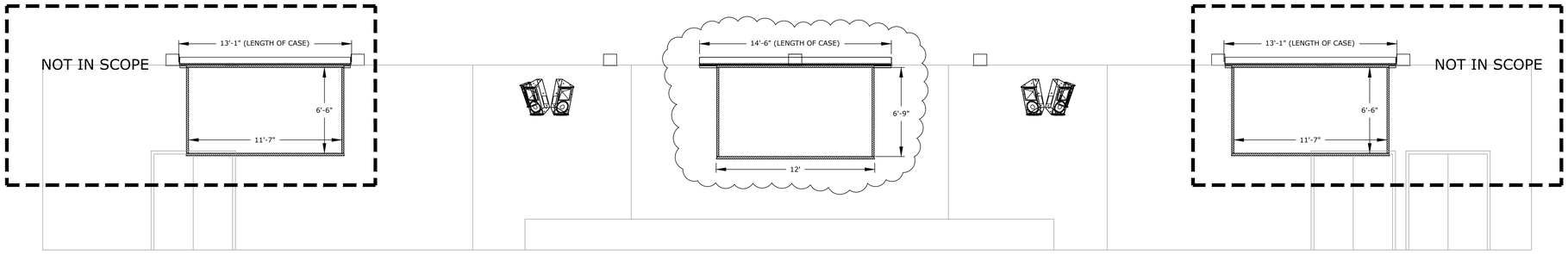

2 BANQUET HALL TRANSVERSE SECTION
SCALE: 1/4" = 1'-0"

LEFT AND RIGHT VIDEO EQUIPMENT WILL NOT BE INSTALLED AS PART OF THE BASE SCOPE. PROVIDE CONDUIT INFRSTRUCTURE ONLY.

ACOUSTIC DIMENSIONS
DALLAS I NEW YORK I SAN DIEGO I UK
15508 Wright Brothers Drive
Addison, Texas 75001
972.239.1505
www.acousticdimensions.com

NEW WORSHIP FACILITIES
FIRST BAPTIST CHURCH OF HIGHLAND PARK
6801 SHERIFF ROAD
LANDOVER, MARYLAND 20785

No.	Description	Date
1	BID SET	2-11-2011
2	VIDEO PRODUCTION REDESIGN	10-07-2013

STAMP

Sheet Title
AUDIO/VIDEO SYSTEMS
SECTIONS
BANQUET HALL

Scale

Project Number

Sheet Number
AV3.03

© 2011 Acoustic Dimensions

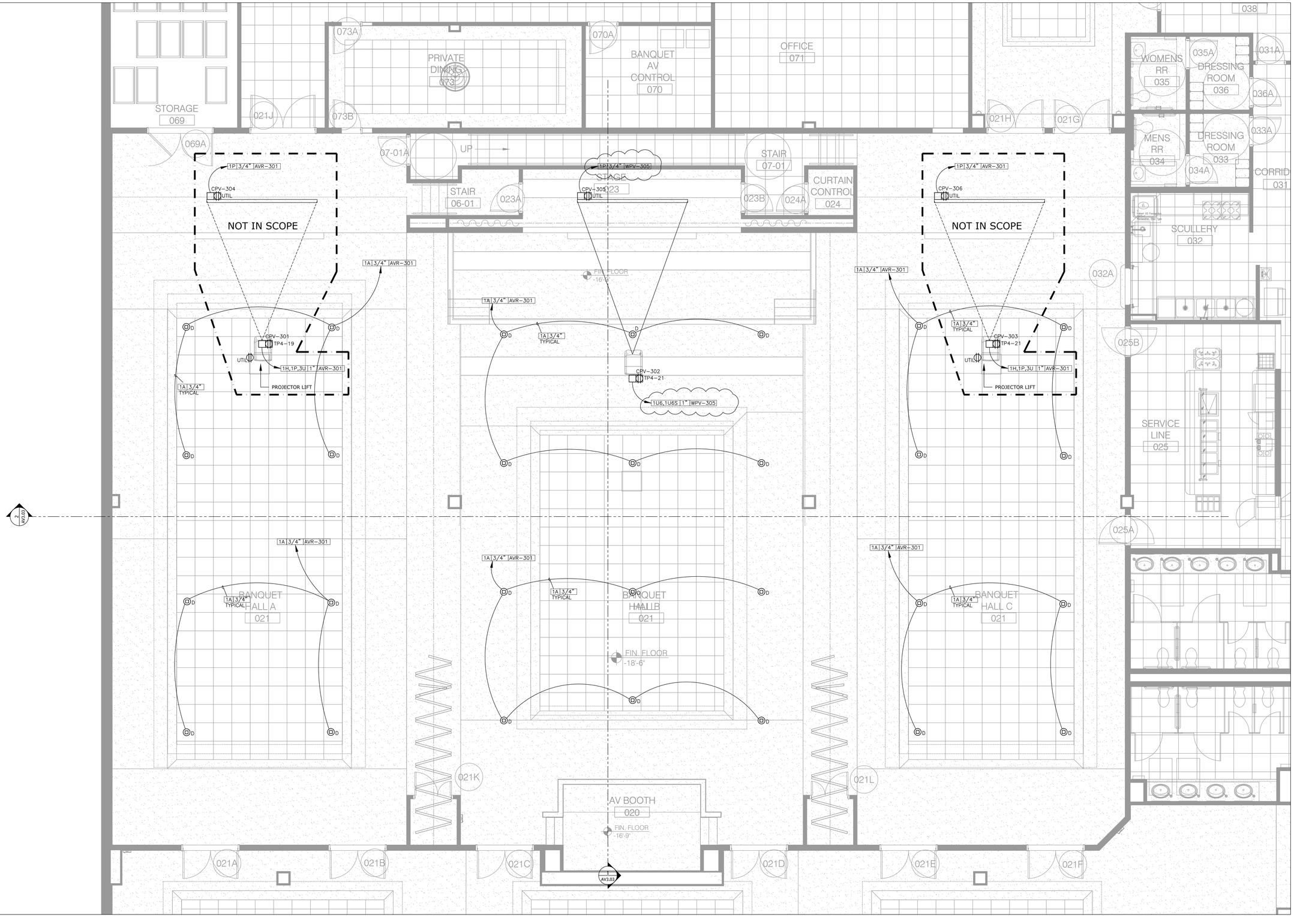

1 BANQUET HALL ENLARGED RCP
SCALE: 1/4" = 1'-0"

ACOUSTIC DIMENSIONS
DALLAS I NEW YORK I SAN DIEGO I UK
15508 Wright Brothers Drive
Addison, Texas 75001
972.239.1505
www.acousticdimensions.com

NEW WORSHIP FACILITIES
FIRST BAPTIST CHURCH OF HIGHLAND PARK
6801 SHERIFF ROAD
LANDOVER, MARYLAND 20785

No.	Description	Date
1	BID SET	2-11-2011
2	VIDEO PRODUCTION REDESIGN	10-07-2013

STAMP

Sheet Title
AUDIO/VIDEO SYSTEMS
ENLARGED RCP
BANQUET HALL

Scale

Project Number

Sheet Number
AV4.53

© 2011 Acoustic Dimensions

NOT IN SCOPE

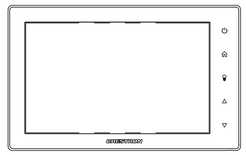

2 WPV-XXX
SCALE: 1/2" = 1"
TYPICAL OF 3:
WPV-202
WPV-301
WPV-302

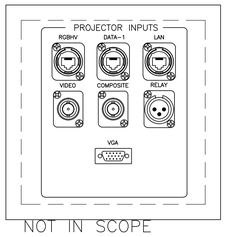

NOT IN SCOPE

3 CPV-301,303 (PROJECTION)
SCALE: 1/2" = 1"

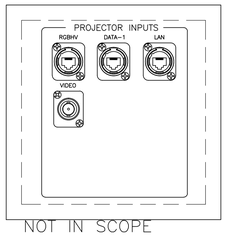

NOT IN SCOPE

4 CPV-302 (PROJECTION)
SCALE: 1/2" = 1"

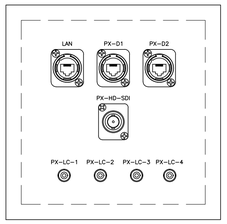

5 WPV-102,103; CPV-101,102 (PROJECTION)
SCALE: 1/2" = 1"
TYPICAL OF 4:
WPV-102: P1
WPV-103; P2
CPV-101; P3
CPV-102; P4

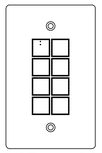

NOT IN SCOPE

6 WPV-301,302
SCALE: 1/2" = 1"

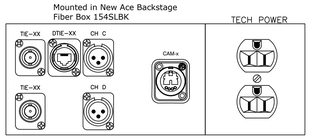

7 FBV-1XX (CAMERA FLOOR BOXES)
SCALE: 1/2" = 1"
TYPICAL OF 5:
FBV-103: VTIE-XX, VTIE-XX; DTIE-XX; CAM-A
FBV-104: VTIE-XX, VTIE-XX; DTIE-XX; CAM-B
FBV-105: VTIE-XX, VTIE-XX; DTIE-XX; CAM-C
FBV-109: VTIE-XX, VTIE-XX; DTIE-XX; CAM-D
FBV-110: VTIE-XX, VTIE-XX; DTIE-XX; CAM-E

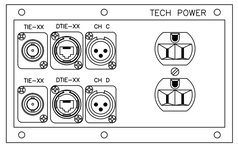

8 FBV-1XX (PLATFORM MONITORING)
SCALE: 1/2" = 1"
TYPICAL OF 4:
FBV-106: VTIE-XX,XX; DTIE-XX,XX
FBV-107: VTIE-XX,XX; DTIE-XX,XX
FBV-108: VTIE-XX,XX; DTIE-XX,XX
FBV-111: VTIE-XX,XX; DTIE-XX,XX

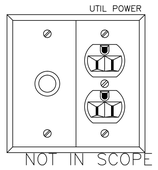

NOT IN SCOPE

9 CPV-304,305,306
SCALE: 1/2" = 1"
GROMMETED HOLE

10 RPV-01 (TYPICAL)
SCALE: 1/2" = 1"

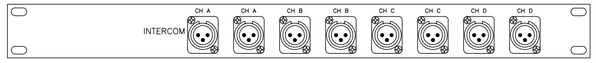

RPV-02 (TYPICAL)
SCALE: 1/2" = 1"

RPV-03 (TYPICAL)
SCALE: 1/2" = 1"

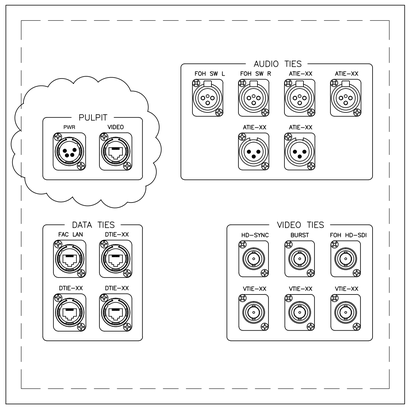

11 WPV-101
SCALE: 1/2" = 1"

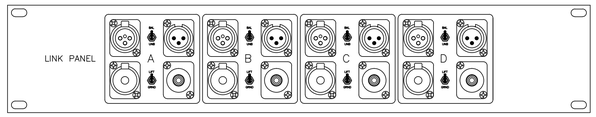

12 RP-LINK
SCALE: 1/2" = 1"
TYPICAL OF 4

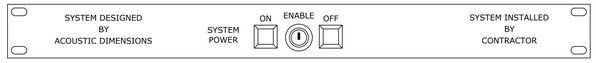

13 RP-PWR
SCALE: 1/2" = 1"
TYPICAL OF 2

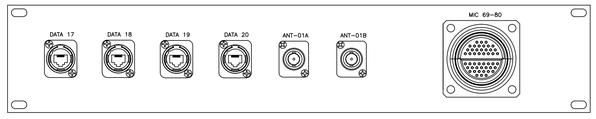

14 RP-FOH
SCALE: 1/2" = 1"

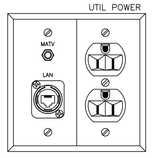

15 DIS-XX.XX
SCALE: 1/2" = 1"
TYPICAL FOR:
DIS-52.96
DIS-42.60
DIS-42.96

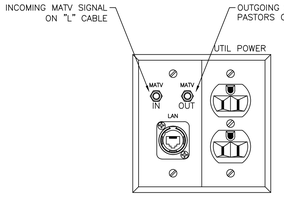

USE SPLITTER BEHIND FIRST LADY TV TO SPLIT OFF SIGNAL AND SEND TO PASTOR'S OFFICE.

16 DIS-42.60
SCALE: 1/2" = 1"

ACOUSTIC DIMENSIONS
DALLAS I NEW YORK I SAN DIEGO I UK
15508 Wright Brothers Drive
Addison, Texas 75001
972.239.1505
www.acousticdimensions.com

NEW WORSHIP FACILITIES
FIRST BAPTIST CHURCH OF HIGHLAND PARK
6801 SHERIFF ROAD
LANDOVER, MARYLAND 20785

No.	Description	Date
1	BID SET	2-11-2011
2	VIDEO PRODUCTION REDESIGN	10-07-2013

STAMP

Sheet Title
AUDIO PANELS

Scale

Project Number

Sheet Number
AV5.03

© 2011 Acoustic Dimensions

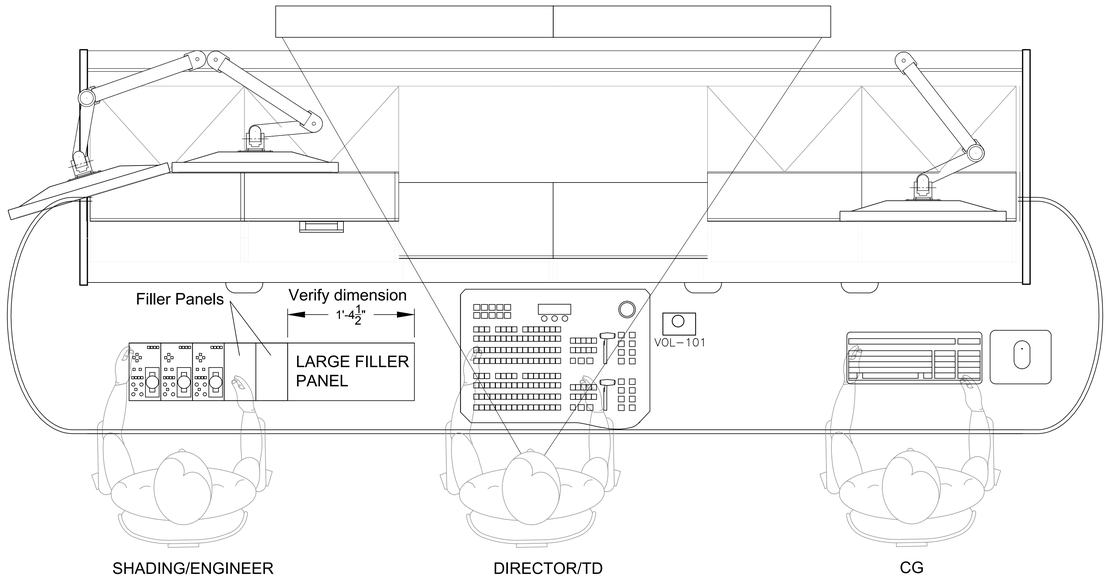

1 VIDEO PRODUCTION FRONT CONSOLE (PLANVIEW)
SCALE: 1-1/2" = 1'-0"

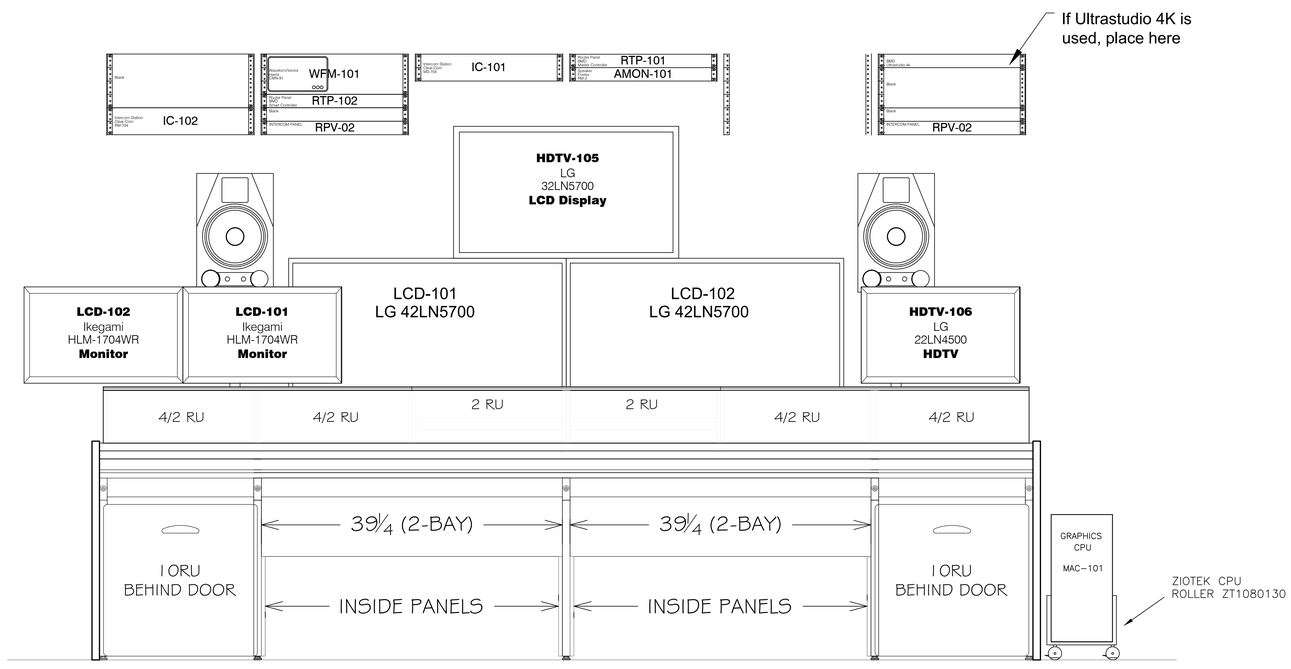

2 VIDEO PRODUCTION FRONT CONSOLE (ELEVATION)
SCALE: 1-1/2" = 1'-0"

ACOUSTIC DIMENSIONS
DALLAS I NEW YORK I SAN DIEGO I UK
15508 Wright Brothers Drive
Addison, Texas 75001
972.239.1505
www.acousticdimensions.com

NEW WORSHIP FACILITIES
FIRST BAPTIST CHURCH OF HIGHLAND PARK
6801 SHERIFF ROAD
LANDOVER, MARYLAND 20785

No.	Description	Date
1	BID SET	2-11-2011
2	VIDEO PRODUCTION REDESIGN	10-07-2013

STAMP

Sheet Title
VIDEO RACK DETAILS

Scale

Project Number

Sheet Number
AV5.11

© 2011 Acoustic Dimensions

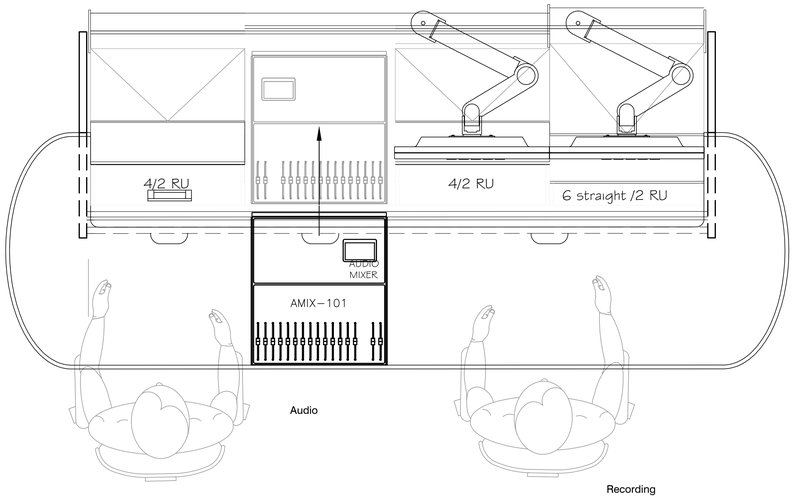

1 VIDEO PRODUCTION REAR CONSOLE (PLANVIEW)
SCALE: 1-1/2" = 1'-0"

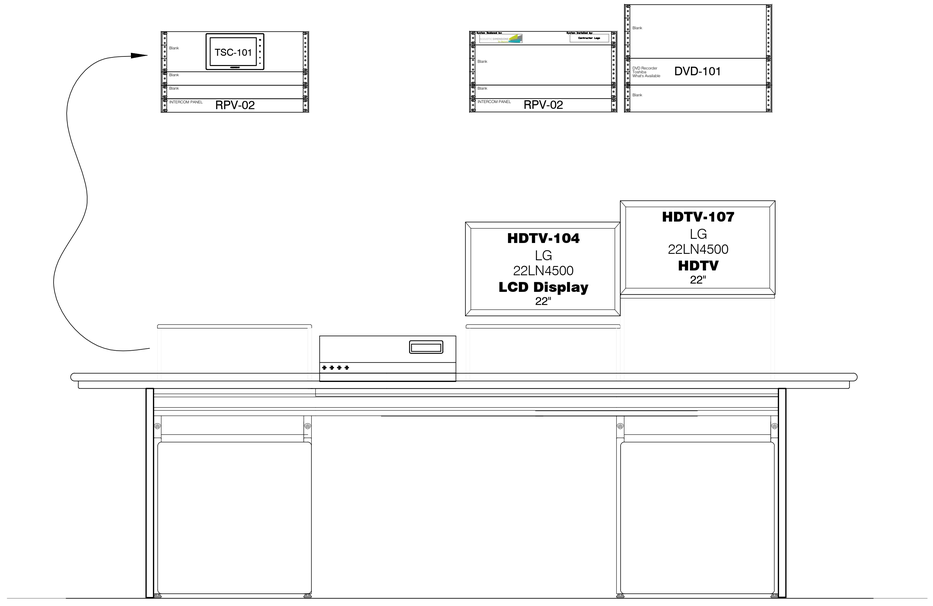

2 VIDEO PRODUCTION REAR CONSOLE (ELEVATION)
SCALE: 1-1/2" = 1'-0"

ACOUSTIC DIMENSIONS

DALLAS I NEW YORK I SAN DIEGO I UK

15508 Wright Brothers Drive
Addison, Texas 75001
972.239.1505

www.acousticdimensions.com

NEW WORSHIP FACILITIES
FIRST BAPTIST CHURCH OF HIGHLAND PARK
6801 SHERIFF ROAD
LANDOVER, MARYLAND 20785

No.	Description	Date
1	BID SET	2-11-2011
2	VIDEO PRODUCTION REDESIGN	10-07-2013

STAMP

Sheet Title

VIDEO RACK DETAILS

Scale

Project Number

Sheet Number

AV5.12

© 2011 Acoustic Dimensions

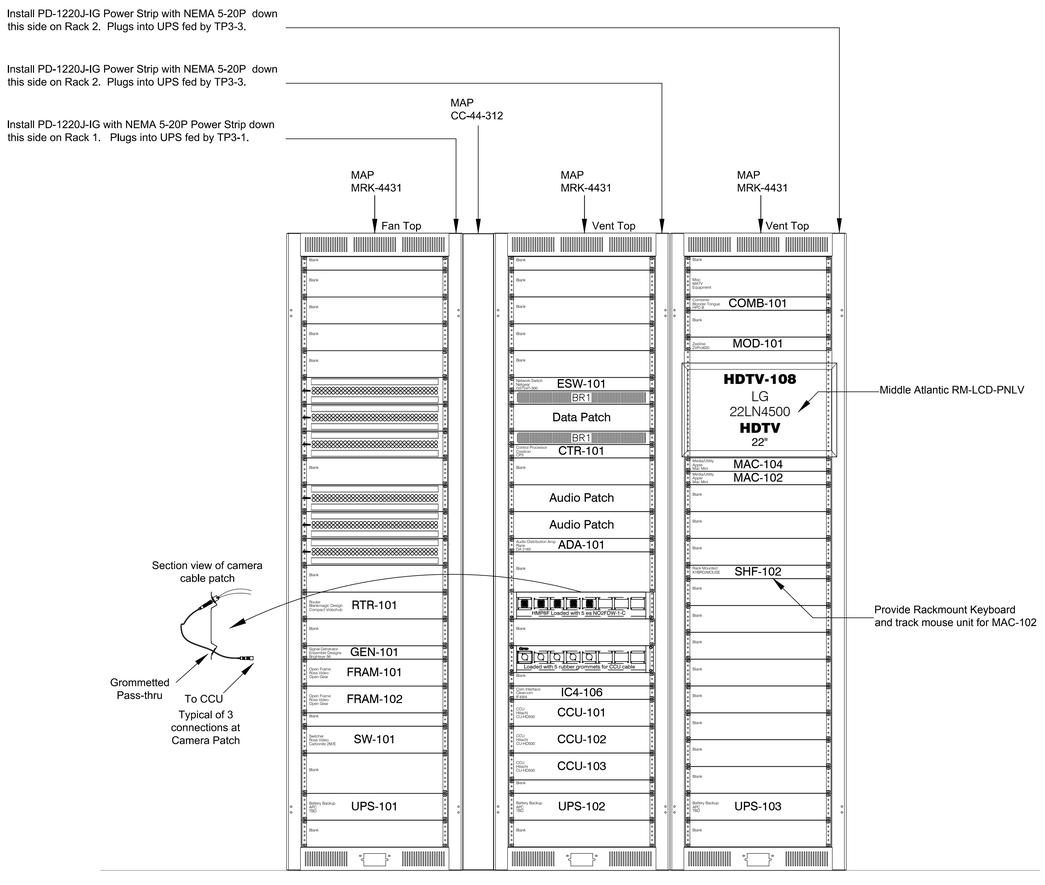

1 VIDEO RACKS ELEVATION
SCALE: N.T.S.

ACOUSTIC DIMENSIONS
DALLAS | NEW YORK | SAN DIEGO | UK
15508 Wright Brothers Drive
Addison, Texas 75001
972.239.1505
www.acousticdimensions.com

NEW WORSHIP FACILITIES
FIRST BAPTIST CHURCH OF HIGHLAND PARK
6801 SHERIFF ROAD
LANDOVER, MARYLAND 20785

No.	Description	Date
1	BID SET	2-11-2011
2	VIDEO PRODUCTION REDESIGN	10-07-2013

STAMP

Sheet Title

VIDEO RACK DETAILS

Scale

Project Number

Sheet Number

AV5.13

© 2011 Acoustic Dimensions

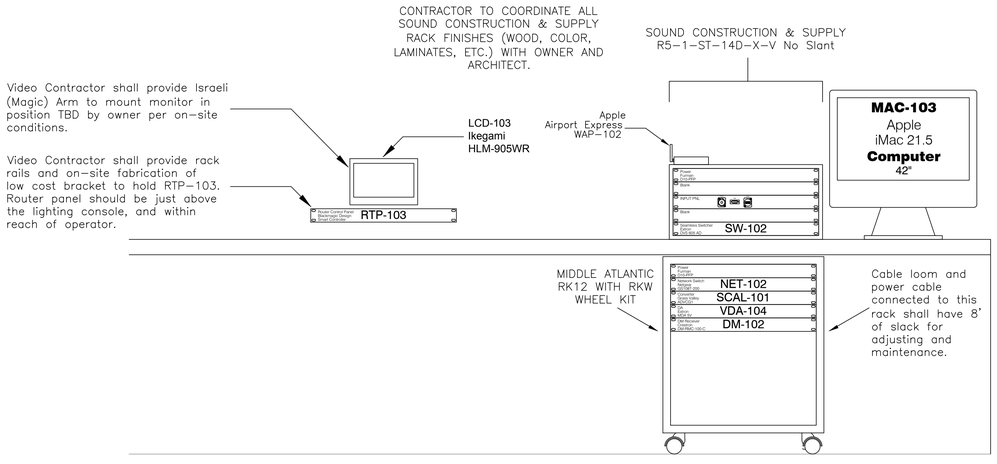

1 LIGHTING CONTROL RACK (ELEVATION)
SCALE: 1-1/2" = 1'-0"

2 FOH VIDEO RACK ELEVATION
SCALE: N.T.S.

ACOUSTIC DIMENSIONS
DALLAS | NEW YORK | SAN DIEGO | UK
15508 Wright Brothers Drive
Addison, Texas 75001
972.239.1505
www.acousticdimensions.com

NEW WORSHIP FACILITIES
FIRST BAPTIST CHURCH OF HIGHLAND PARK
6801 SHERIFF ROAD
LANDOVER, MARYLAND 20785

No.	Description	Date
1	BID SET	2-11-2011
2	VIDEO PRODUCTION REDESIGN	10-07-2013

STAMP

Sheet Title
VIDEO RACK DETAILS

Scale

Project Number

Sheet Number
AV5.14

© 2011 Acoustic Dimensions

Breaker #	Description	Breaker	Br Type	Load (W)		Load (W)	Br Type	Breaker	Description	Breaker #
1	TP1-1: SANCTUARY AUDIO RACKS	20	M	200	A	400	M	20	TP1-2: SANCTUARY AUDIO RACKS	2
3	TP1-3: SANCTUARY AUDIO RACKS	20	M	900	B	800	M	20	TP1-4: SANCTUARY AUDIO RACKS	4
5	TP1-5: SANCTUARY AUDIO RACKS	20	M	800	C	800	M	20	TP1-6: SANCTUARY AUDIO RACKS	6
7	TP1-7: SANCTUARY AUDIO RACKS	20	M	800	A	800	M	20	TP1-8: SANCTUARY AUDIO RACKS	8
9	TP1-9: SANCTUARY AUDIO RACKS	20	M	800	B	1200	M	20	TP1-10: SANCTUARY AUDIO RACKS	10
11	TP1-11: SANCTUARY AUDIO RACKS	20	M	1200	C	1200	M	20	TP1-12: SANCTUARY AUDIO RACKS	12
13	TP1-13: SANCTUARY AUDIO RACKS	20	M	1200	A	1600	M	20	TP1-14: SANCTUARY AUDIO RACKS	14
15	TP1-15: SANCTUARY AUDIO RACKS	20	M	1600	B	1600	M	20	TP1-16: SANCTUARY AUDIO RACKS	16
17	TP1-17: SANCTUARY AUDIO RACKS	20	M	1600	C	1600	M	20	TP1-18: SANCTUARY AUDIO RACKS	18
19	TP1-19: SANCTUARY AUDIO RACKS	20	M	1600	A	1600	M	20	TP1-20: SANCTUARY AUDIO RACKS	20
21	TP1-21: SANCTUARY AUDIO RACKS	20	M	1600	B	1600	M	20	TP1-22: SANCTUARY AUDIO RACKS	22
23	TP1-23: SANCTUARY AUDIO RACKS	20	M	1600	C	1600	M	20	TP1-24: SANCTUARY AUDIO RACKS	24
25	TP1-25: SANCTUARY AUDIO RACKS	20	M	1600	A	1600	M	20	TP1-26: SANCTUARY AUDIO RACKS	26
27	TP1-27: SANCTUARY AUDIO RACKS	20	M	1600	B	1600	M	20	TP1-28: SANCTUARY AUDIO RACKS	28
29	TP1-29: SANCTUARY AUDIO RACKS	20	M	1600	C	1600	M	20	TP1-30: SANCTUARY AUDIO RACKS	30
31	TP1-31:	20	M		A		M	20	TP1-32	32
33	TP1-33:	20	M		B		M	20	TP1-34:	34
35	TP1-35:	20	M		C		M	20	TP1-36:	36
37	TP1-37: SANCTUARY AUDIO RACKS (CHAPEL AMPS)	20	M	1200	A		M	20	TP1-38:	38
39	TP1-39:	20	M		B		M	20	TP1-40:	40
41	TP1-41:	20	M		C	40			NOT AVAILABLE (SEQUENCER POWER)	42

BR Type = Breaker Type
U = Unmotorized
M = Motorized

TOTAL LOAD (W):	33000

1 TECHNICAL POWER SCHEDULE (TP-1)
SCALE: N.T.S.

Breaker #	Description	Breaker	Br Type	Load (W)		Load (W)	Br Type	Breaker	Description	Breaker #
1	VIDEO ENGINEERING RACK	20	U	1000	A	800	U	20	VIDEO PRODUCTION CONSOLES	2
3	VIDEO ENGINEERING RACK	20	U	1000	B	800	U	20	VIDEO PRODUCTION CONSOLES	4
5	VIDEO ENGINEERING RACK	20	U	1000	C	800	U	20	VIDEO PRODUCTION CONSOLES	6
7	VIDEO ENGINEERING RACK	20	U	1000	A	800	U	20	VIDEO PRODUCTION CONSOLES	8
9					B	800	U	20	VIDEO PRODUCTION MONITORS	10
11					C	800	U	20	VIDEO PRODUCTION MONITORS	12
13	AUDIO RECORDING ROOM	20	U	1000	A					14
15	AUDIO RECORDING ROOM	20	U	1000	B					16
17	NON-LINEAR EDIT ROOM	20	U	1000	C					18
19	NON-LINEAR EDIT SPACE	20	U	1000	A					20
21	VIDEO PROJECTION 120v	20	U	500	B	2400	U	30	HOUSE LEFT VIDEO PROJECTION	22
23					C	-	-	-	-	24
25					A	2400	U	30	HOUSE RIGHT VIDEO PROJECTION	26
27					B	-	-	-	-	28
29					C					30
31					A					32
33					B					34
35					C					36
37					A					38
39					B					40
41					C					42

BR Type = Breaker Type
U = Unmotorized
M = Motorized

TOTAL LOAD (W):	18100

3 TECHNICAL POWER SCHEDULE (TP-3)
SCALE: N.T.S.

Breaker #	Description	Breaker	Br Type	Load (W)		Load (W)	Br Type	Breaker	Description	Breaker #
1	TP2-1: SANCTUARY STAGE	20	U	800	A	800	U	20	TP2-2: SANCTUARY STAGE	2
3	TP2-3: SANCTUARY STAGE	20	U	800	B	1000	U	20	TP2-4: SANCTUARY STAGE	4
5	TP2-5: SANCTUARY CONTROL BOOTH	20	U	800	C	800	U	20	TP2-6: SANCTUARY CONTROL BOOTH	6
7	TP2-7: SANCTUARY MONITOR MIX LOCATION	20	U	800	A	800	U	20	TP2-8: SANCTUARY MONITOR MIX LOCATION	8
9	TP2-9: SANCTUARY CONTROL BOOTH	20	U	800	B	800	U	20	TP2-10: SANCTUARY AUDIO RACKS	10
11	TP2-11: SANCTUARY AUDIO RACKS	20	U	800	C	800	U	20	TP2-12:	12
13	TP2-13: SANCTURARY VIDEO FOH RACK	20	U	800	A		U	20	TP2-14:	14
15	TP2-15:	20	U		B		U	20	TP2-16:	16
17	TP2-17:	20	U		C		U	20	TP2-18:	18
19	TP2-19:	20	U		A		U	20	TP2-20:	20
21	HOUSE LEFT VIDEO FLOOR POCKETS	20	U	800	B		U	20	TP2-22:	22
23	CENTER VIDEO FLOOR POCKETS	20	U	800	C		U	20	TP2-24:	24
25	HOUSE RIGHT VIDEO FLOOR POCKETS	20	U	800	A		U	20	TP2-26:	26
27	PLATFORM VIDEO FLOOR POCKETS	20	U	800	B		U	20	TP2-28:	28
29	CRY ROOM	20	U	200	C		U	20	TP2-30:	30
31	TP2-31:	20	U		A	800	U	20	TP2-32: CHOIR ROOM RACK	32
33	TP2-33:	20	U		B	1200	U	20	TP2-34: CHOIR ROOM RACK	34
35	CHAPEL PROJECTION	20	U	800	C	800	U	20	TP2-36: CHAPEL STAGE	36
37	TP2-37: CHAPEL STAGE RACK	20	U	800	A	800	U	20	TP2-38: CHAPEL STAGE	38
39	TP2-39: CHAPEL MIX POSITION	20	U	800	B	800	U	20	TP2-40: CHAPEL STAGE	40
41	TP2-41:	20	U		C		U	20	TP2-42:	42

BR Type = Breaker Type
U = Unmotorized
M = Motorized

TOTAL LOAD (W):	20800

2 TECHNICAL POWER SCHEDULE (TP-2)
SCALE: N.T.S.

Breaker #	Description	Breaker	Br Type	Load (W)		Load (W)	Br Type	Breaker	Description	Breaker #
1	--				A	800	U	20	TP4-2: BANQUET HALL STAGE	2
3	MAIN				B	800	U	20	TP4-4: BANQUET HALL STAGE	4
5	--				C	800	U	20	TP4-6: BANQUET HALL STAGE	6
7	TP4-7: BANQUET HALL AUDIO RACK	20	U	800	A	800	U	20	TP4-8: BANQUET HALL MIX POSITION	8
9	TP4-9: BANQUET HALL AUDIO RACK	20	U	1200	B	800	U	20	TP4-10: BANQUET HALL MIX POSITION	10
11	TP4-11: BANQUET HALL AUDIO RACK	20	U	1200	C	1200	U	20	TP4-12: BANQUET HALL AUDIO RACK	12
13	TP4-13: BANQUET HALL AUDIO RACK	20	U	1200	A				TP4-14: BANQUET HALL	14
15	TP4-15:				B				TP4-16: BANQUET HALL	16
17	TP4-17:				C				TP4-18:	18
19	TP4-19: BANQUET HALL PROJECTION	20	U	1000	A				TP4-20:	20
21	TP4-21: BANQUET HALL PROJECTION	20	U	1000	B				TP4-22:	22
23	TP4-23:				C				TP4-24:	24
25	TP4-25:				A				TP4-26:	26
27	TP4-27:				B				TP4-28:	28
29	TP4-29:				C				TP4-30:	30

BR Type = Breaker Type
U = Unmotorized
M = Motorized

TOTAL LOAD (W):	11600

4 TECHNICAL POWER SCHEDULE (TP-4)
SCALE: N.T.S.

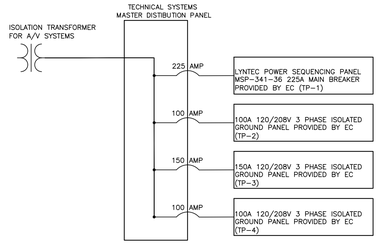

5 TECHNICAL POWER DISTRIBUTION
SCALE: N.T.S.

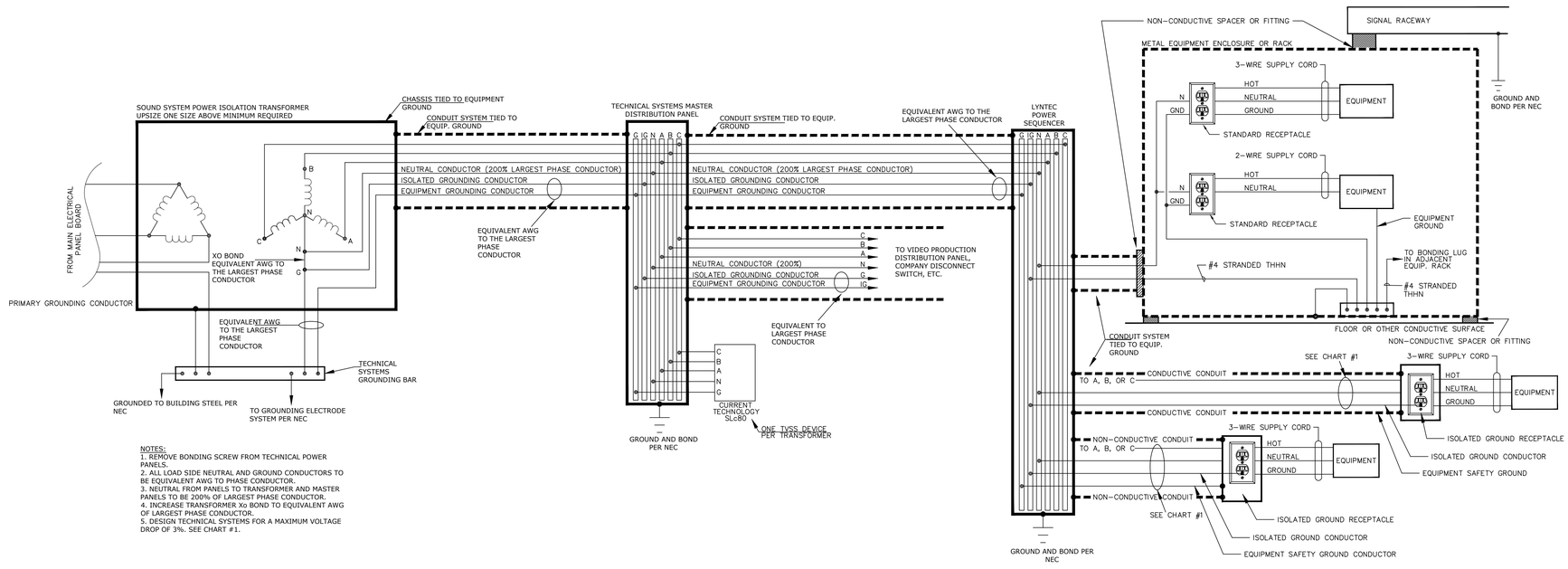

NOTES:
1. REMOVE BONDING SCREW FROM TECHNICAL POWER PANELS.
2. ALL LOAD SIDE NEUTRAL AND GROUND CONDUCTORS TO BE EQUIVALENT AWG TO PHASE CONDUCTOR.
3. NEUTRAL FROM PANELS TO TRANSFORMER AND MASTER PANELS TO BE 200% OF LARGEST PHASE CONDUCTOR.
4. INCREASE TRANSFORMER Xo BOND TO EQUIVALENT AWG OF LARGEST PHASE CONDUCTOR.
5. DESIGN TECHNICAL SYSTEMS FOR A MAXIMUM VOLTAGE DROP OF 3%. SEE CHART #1.

MINIMUM AWG BASED ON 3% VOLTAGE DROP				
	CABLE LENGTH FROM PANEL	0'-100'	100'-200'	200'-400'
120V/20A	LOAD LESS THAN 1000W	12	12	10
	LOAD GREATER THAN 1000W	12	10	7 OR (2) 10
120V/30A	LOAD LESS THAN 2000W	10	10	7 OR (2) 10
	LOAD GREATER THAN 2000W	10	8	4 OR (4) 10

CHART #1 - MINIMUM AWG
SCALE: NONE

1. THE PURPOSE IS TO PROVIDE A SEPARATE GROUND FOR THE SOUND SYSTEM THAT BONDS TO THE BUILDING GROUND AT ONE SPECIFIED POINT TO REDUCE THE POTENTIAL OF GROUND LOOPS AND MINIMIZE NOISE.
2. THE INSULATED GROUND WIRE FROM THE POWER SOURCE TO THE PANEL WILL BE SIZED ACCORDING TO N.E.C. TIE THE MASTER SOUND POWER PANEL ISOLATED GROUND BAR DIRECTLY TO SERVICE GROUND. ISOLATE THE GROUND BAR FROM THE NEUTRAL BAR AND PANEL.
3. ALL GROUND WIRES TO BE INSULATED COPPER OF GAUGE INDICATED OR LARGER.
4. PROVIDE AN INSULATED APPROPRIATELY SIZED (#4 OR LARGER) CABLE FROM THE PANEL TO EACH RACK GROUND BAR. ELECTRICALLY CONNECT THE GROUND BAR IN EACH RACK TO THE RACK RAIL.
5. ENSURE RACK RAILS AND GROUND BAR IN RACK ARE CONNECTED TOGETHER.
6. ALL POWER CIRCUITS TO RECEPTACLES TO BE 3-WIRE CIRCUITS. PROVIDE ISOLATED GROUND RECEPTACLES FOR ALL TECHNICAL SYSTEMS RELATED POWER OUTLETS OTHER THAN IN MAIN EQUIPMENT RACKS.
7. PROVIDE BOTH AN ISOLATED GROUND AND AN EQUIPMENT SAFETY GROUND CONDUCTOR TO ALL IG RECEPTACLES.
8. ISOLATE ALL CONDUITS ENTERING EQUIPMENT RACKS WITH DIELECTRICALLY INSULATED CONNECTORS. ISOLATE RACKS FROM ANY CONDUCTIVE SURFACE INCLUDING CONCRETE.

6 TECHNICAL POWER GROUNDING DETAIL
SCALE: NONE

ACOUSTIC DIMENSIONS
DALLAS | NEW YORK | SAN DIEGO | UK
15508 Wright Brothers Drive
Addison, Texas 75001
972.239.1505
www.acousticdimensions.com

NEW WORSHIP FACILITIES
FIRST BAPTIST CHURCH OF HIGHLAND PARK
6801 SHERIFF ROAD
LANDOVER, MARYLAND 20785

No.	Description	Date
1	BID SET	2-11-2011
2	VIDEO PRODUCTION REDESIGN	10-07-2013

STAMP

Sheet Title
TECHNICAL POWER DETAILS

Scale

Project Number

Sheet Number
AV6.00

© 2011 Acoustic Dimensions

SOURCE	DRAWING REFERENCE	LOCATION	BOX/DEVICE SIZE (H X W X D)	BOX/DEVICE DESCRIPTION	MOUNTING	HEIGHT	SIGNAL TYPE	BACK BOX PROVIDED BY	BACK BOX INSTALLED BY	PANEL PROVIDED BY	PANEL INSTALLED BY	DEVICE PROVIDED BY	DEVICE INSTALLED BY	NOTES
VIDEO PRODUCTION														
VR-01	AV1.54	VIDEO ENGINEERING RACK	83.125" X 22" X 31"	MIDDLE ATLANTIC VRK-44-31H	FLUSH	ON FLOOR	VIDEO					AV	AV	
VR-02	AV1.54	VIDEO ENGINEERING RACK	83.125" X 22" X 31"	MIDDLE ATLANTIC VRK-44-31H	FLUSH	ON FLOOR	VIDEO					AV	AV	
VR-03	AV1.54	VIDEO ENGINEERING RACK	83.125" X 22" X 31"	MIDDLE ATLANTIC VRK-44-31H	FLUSH	ON FLOOR	VIDEO					AV	AV	
VR-04	AV1.54	VIDEO ENGINEERING RACK	83.125" X 22" X 31"	MIDDLE ATLANTIC VRK-44-31H	FLUSH	ON FLOOR	VIDEO					AV	AV	
VR-05	AV1.54	VIDEO ENGINEERING RACK	83.125" X 22" X 31"	MIDDLE ATLANTIC VRK-44-31H	FLUSH	ON FLOOR	VIDEO					AV	AV	
VR-06	AV1.54	VIDEO ENGINEERING RACK	83.125" X 22" X 31"	MIDDLE ATLANTIC VRK-44-31H	FLUSH	ON FLOOR	VIDEO					AV	AV	
JBV-101	AV1.54	VIDEO PRODUCTION	24" X 24" X 8"	TYPE 1 WALL MOUNT ENCLOSURE W/ BLANK PANEL	SURFACE	48" AFF	VIDEO	EC	EC	EC	EC			
JBL-104	AV1.54	VIDEO PRODUCTION	18" X 18" X 8"	TYPE 1 WALL MOUNT ENCLOSURE W/ BLANK PANEL	SURFACE	48" AFF	LINE	EC	EC	EC	EC			
TP-3	AV1.54	VIDEO PRODUCTION	50" X 20" X 5.75"	150A 3-PHASE ISOLATED GROUND PANEL BY EC	SURFACE	48" AFF	POWER					EC	EC	
WPV-01	AV1.54	VIDEO PRODCUTION FRONT CONSOLE	8" X 8" X 4"	TYPE 1 SCREW COVER PULL BOX	FLUSH	12" AFF	VIDEO	EC	EC	EC	EC			NO PANELS REQUIRED
WPV-02	AV1.54	NON-LINEAR EDIT ROOM	8" X 8" X 4"	TYPE 1 SCREW COVER PULL BOX	FLUSH	12" AFF	VIDEO	EC	EC	EC	EC			
WPV-03	AV1.54	NON-LINEAR EDIT ROOM	8" X 8" X 4"	TYPE 1 SCREW COVER PULL BOX	FLUSH	12" AFF	VIDEO	EC	EC	EC	EC			
WPV-04	AV1.54	NON-LINEAR EDIT ROOM	8" X 8" X 4"	TYPE 1 SCREW COVER PULL BOX	FLUSH	12" AFF	VIDEO	EC	EC	EC	EC			
WPV-05	AV1.54	AUDIO RECORDING DISPLAY	7" X 17" X 3.848"	ARLINGTON INDUSTRIES TVBS613 W/ HI-LOW VOLTAGE PARTITION	FLUSH	66" AFF	VIDEO	EC	EC	EC	EC			NO PANELS REQUIRED
WPV-06	AV1.54	DELETE												
FB-01	AV1.54	DELETE												
FB-02	AV1.54	DELETE												
WPV-07	AV1.54	VIDEO PRODCUTION REAR CONSOLE	8" X 8" X 4"	TYPE 1 SCREW COVER PULL BOX	FLUSH	12" AFF	VIDEO	EC	EC	EC	EC			NO PANELS REQUIRED
MAIN WORSHIP CENTER VIDEO JUNCTION BOXES														
WPV-101	AV1.50	AV BOOTH	12" X 12" X 4"	TYPE 1 SCREW COVER PULL BOX W/CUSTOM PANEL	FLUSH	12" AFF	VIDEO	EC	EC	AV	AV			MOUNT TECH POWER ADJACENT
WPV-102	AV1.30	HOUSE LEFT PROJECTION	6" X 6" X 4"	TYPE 1 SCREW COVER PULL BOX W/CUSTOM PANEL	FLUSH	12" AFF	VIDEO	EC	EC	AV	AV			
WPV-103	AV1.30	HOUSE RIGHT PROJECTION	6" X 6" X 4"	TYPE 1 SCREW COVER PULL BOX W/CUSTOM PANEL	FLUSH	12" AFF	VIDEO	EC	EC	AV	AV			
CPV-101	AV1.30	HOUSE LEFT REAR WALL PROJ	6" X 6" X 4"	TYPE 1 SCREW COVER PULL BOX W/CUSTOM PANEL	FLUSH	CEILING	VIDEO	EC	EC	AV	AV			MOUNT TECH POWER ADJACENT
CPV-102	AV1.30	HOUSE RIGHT REAR WALL PROJ	6" X 6" X 4"	TYPE 1 SCREW COVER PULL BOX W/CUSTOM PANEL	FLUSH	CEILING	VIDEO	EC	EC	AV	AV			MOUNT TECH POWER ADJACENT
FBV-103	AV1.20	FLOOR HOUSE LEFT CAM	18.5" X 10.5" X 6"	ACE BACKSTAGE STAGE POCKET (#154-SL-BK for Fiber Optic)	FLUSH	IN SLAB	VIDEO	AV	EC	AV	AV			MOUNT TECH POWER IN BOX
FBV-104	AV1.20	CENTER CAMS	18.5" X 10.5" X 6"	ACE BACKSTAGE STAGE POCKET (#154-SL-BK for Fiber Optic)	FLUSH	IN SLAB	VIDEO	AV	EC	AV	AV			MOUNT TECH POWER IN BOX
FBV-105	AV1.20	FLOOR HOUSE RIGHT CAM	18.5" X 10.5" X 6"	ACE BACKSTAGE STAGE POCKET (#154-SL-BK for Fiber Optic)	FLUSH	IN SLAB	VIDEO	AV	EC	AV	AV			MOUNT TECH POWER IN BOX
FBV-106	AV1.20	PLATFORM MONITORING	10" X 10" X 6"	ACE BACKSTAGE FULL POCKET (#122-SL-BK W/ #102BBX BACK BOX)	FLUSH	IN SLAB	VIDEO	AV	EC	AV	AV			MOUNT TECH POWER IN BOX
FBV-107	AV1.20	PLATFORM MONITORING	10" X 10" X 6"	ACE BACKSTAGE FULL POCKET (#122-SL-BK W/ #102BBX BACK BOX)	FLUSH	IN SLAB	VIDEO	AV	EC	AV	AV			MOUNT TECH POWER IN BOX
FBV-108	AV1.20	PLATFORM MONITORING	10" X 10" X 6"	ACE BACKSTAGE FULL POCKET (#122-SL-BK W/ #102BBX BACK BOX)	FLUSH	IN SLAB	VIDEO	AV	EC	AV	AV			MOUNT TECH POWER IN BOX
FBV-109	AV1.51	ORCHESTRA HOUSE LEFT CAM	18.5" X 10.5" X 6"	ACE BACKSTAGE STAGE POCKET (#154-SL-BK for Fiber Optic)	FLUSH	IN SLAB	VIDEO	AV	EC	AV	AV			MOUNT TECH POWER IN BOX
FBV-110	AV1.51	ORCHESTRA HOUSE RIGHT CAM	18.5" X 10.5" X 6"	ACE BACKSTAGE STAGE POCKET (#154-SL-BK for Fiber Optic)	FLUSH	IN SLAB	VIDEO	AV	EC	AV	AV			MOUNT TECH POWER IN BOX
FBV-111	AV1.51	STAFF MEMBER SEATING	10" X 10" X 6"	ACE BACKSTAGE FULL POCKET (#122-SL-BK W/ #102BBX BACK BOX)	FLUSH	IN SLAB	VIDEO	AV	EC	AV	AV			
IC	AV1.40	VARIOUS	2-GANG	DOUBLE GANG PULL BOX W/CUSTOM PANEL	FLUSH	VARIOUS	INTERCOM	EC	EC	AV	AV			
DIS-42.68	AV1.10	PASTOR'S OFFICE	7" X 17" X 3.848"	ARLINGTON INDUSTRIES TVBS613 W/ HI-LOW VOLTAGE PARTITION	FLUSH	68" AFF	MATV	EC	EC	AV	AV			MOUNT DUPLEX UTILITY IN SAME BOX AS RF
DIS-42.68	AV1.10	FIRST LADY	7" X 17" X 3.848"	ARLINGTON INDUSTRIES TVBS613 W/ HI-LOW VOLTAGE PARTITION	FLUSH	68" AFF	MATV	EC	EC	AV	AV			MOUNT DUPLEX UTILITY IN SAME BOX AS RF
DIS-42.76	AV1.20	MEETING 117	7" X 17" X 3.848"	ARLINGTON INDUSTRIES TVBS613 W/ HI-LOW VOLTAGE PARTITION	FLUSH	76" AFF	MATV	EC	EC	AV	AV			MOUNT DUPLEX UTILITY IN SAME BOX AS RF
DIS-42.96	AV1.20	BOOKSTORE	7" X 17" X 3.848"	ARLINGTON INDUSTRIES TVBS613 W/ HI-LOW VOLTAGE PARTITION	FLUSH	96" AFF	MATV	EC	EC	AV	AV			MOUNT DUPLEX UTILITY IN SAME BOX AS RF
DIS-52.96	AV1.20	ATRIUM	7" X 17" X 3.848"	ARLINGTON INDUSTRIES TVBS613 W/ HI-LOW VOLTAGE PARTITION	FLUSH	96" AFF	MATV	EC	EC	AV	AV			MOUNT DUPLEX UTILITY IN SAME BOX AS RF
CHAPEL VIDEO JUNCTION BOXES														
WPV-201	AV4.52	PROJECTION LOCATION IN SOFFIT	6" X 6" X 4"	TYPE 1 SCREW COVER PULL BOX W/CUSTOM PANEL	SURFACE	SOFFIT	VIDEO	EC	EC	AV	AV			
WPV-202	AV1.52	CHAPEL TOUCH PANEL	2-GANG	DOUBLE GANG PULL BOX	FLUSH	60" AFF	DATA	AV	EC	AV	AV			FOR CRESTRON TOUCH PANEL
CPV-201	AV4.52	VIDEO PROJECTION SCREEN	2-GANG	DOUBLE GANG PULL BOX	FLUSH	CEILING	LINE	EC	EC	EC	EC			
BANQUET HALL VIDEO JUNCTION BOXES														
WPV-301	AV1.53	INDIVIDUAL ROOM CONTROL POSITION	2-GANG	DOUBLE GANG PULL BOX	FLUSH	60" AFF	DATA	AV	EC	AV	AV			FOR CRESTRON TOUCH PANEL
WPV-302	AV1.53	INDIVIDUAL ROOM CONTROL POSITION	2-GANG	DOUBLE GANG PULL BOX	FLUSH	60" AFF	DATA	AV	EC	AV	AV			FOR CRESTRON TOUCH PANEL
WPV-303	AV1.53	BANQUET INPUT LEFT	1-GANG	DOUBLE GANG PULL BOX	FLUSH	OUTLET HEIGHT	VIDEO	EC	EC	AV	AV			EXTRON 60-583-11, 70-794-02; 70-315-11
WPV-304	AV1.53	BANQUET INPUT RIGHT	1-GANG	DOUBLE GANG PULL BOX	FLUSH	OUTLET HEIGHT	VIDEO	EC	EC	AV	AV			EXTRON 60-583-11, 70-794-02; 70-315-11
WPV-305	AV1.53	BANQUET AV BOOTH VIDEO	8" X 8" X 4"	TYPE 1 SCREW COVER PULL BOX W/CUSTOM PANEL	FLUSH	OUTLET HEIGHT	VIDEO	EC	EC	AV	AV			
CPV-301	AV4.53	HOUSE LEFT PROJECTION	6" X 6" X 4"	TYPE 1 SCREW COVER PULL BOX W/CUSTOM PANEL	SURFACE	12' AFF	VIDEO	EC	EC	EC	EC			
CPV-302	AV4.53	CENTER PROJECTION	6" X 6" X 4"	TYPE 1 SCREW COVER PULL BOX W/CUSTOM PANEL	SURFACE	12' AFF	VIDEO	EC	EC	EC	EC			
CPV-303	AV4.53	HOUSE RIGHT PROJECTION	6" X 6" X 4"	TYPE 1 SCREW COVER PULL BOX W/CUSTOM PANEL	SURFACE	12' AFF	VIDEO	EC	EC	EC	EC			
CPV-304	AV4.53	PROJECTION SCREEN CONTROL	2-GANG	DOUBLE GANG PULL BOX	FLUSH	CEILING	CTRL	EC	EC	EC	EC			
CPV-305	AV4.53	PROJECTION SCREEN CONTROL	2-GANG	DOUBLE GANG PULL BOX	FLUSH	CEILING	CTRL	EC	EC	EC	EC			
CPV-306	AV4.53	PROJECTION SCREEN CONTROL	2-GANG	DOUBLE GANG PULL BOX	FLUSH	CEILING	CTRL	EC	EC	EC	EC			

1 VIDEO JUNCTION BOX SCHEDULE
SCALE: N.T.S.

ACOUSTIC DIMENSIONS
DALLAS I NEW YORK I SAN DIEGO I UK
15508 Wright Brothers Drive
Addison, Texas 75001
972.239.1505
www.acousticdimensions.com

NEW WORSHIP FACILITIES
FIRST BAPTIST CHURCH OF HIGHLAND PARK
6801 SHERIFF ROAD
LANDOVER, MARYLAND 20785

No.	Description	Date
1	BID SET	2-11-2011
2	VIDEO PRODUCTION REDESIGN	10-07-2013

STAMP

Sheet Title
VIDEO JUNCTION BOX SCHEDULE

Scale

Project Number

Sheet Number
AV6.02

© 2011 Acoustic Dimensions

FOR ALL CCUs:

The following CCU connectors can use Winford DIN breakout boards:

Tally:	Winford RK9M-R-DIN
RS232:	Winford BRK9M-R-DIN
Mic Remote:	Winford BRK15M-R-DIN
Comm:	Winford BRK25M-R-DIN

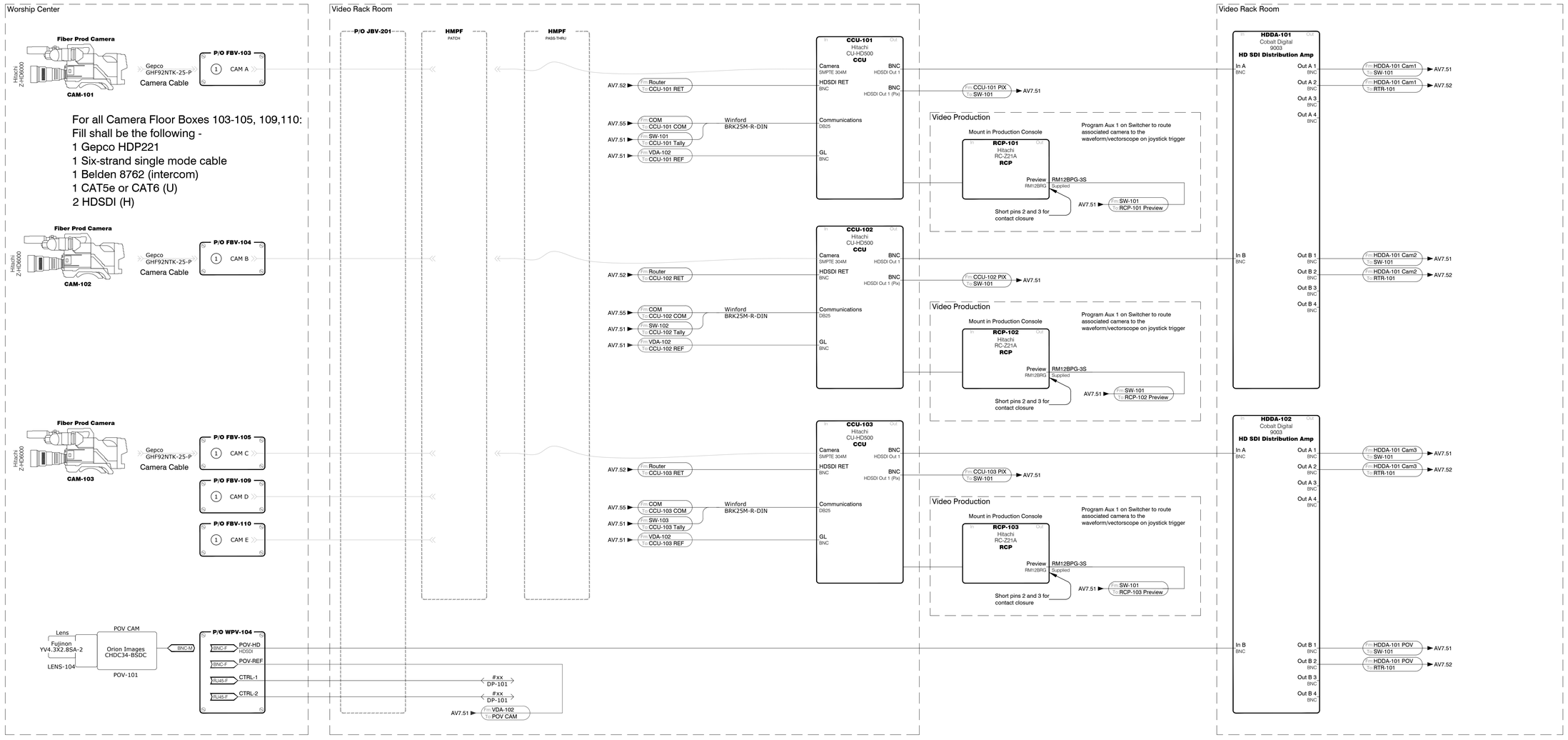

1 Camera Cable chain - Single Camera (Cable - Gepco HDP221)

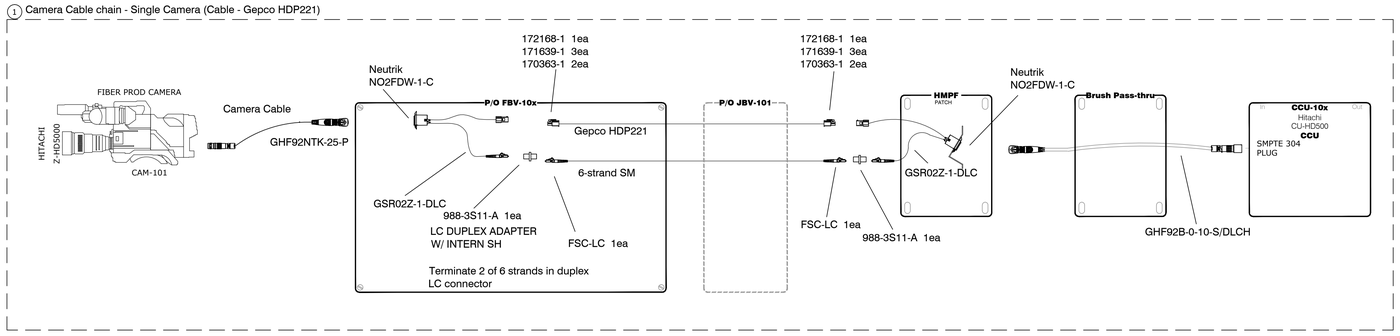

1 Camera Schematics

SCALE: NS

ACOUSTIC DIMENSIONS

DALLAS I NEW YORK I SAN DIEGO I UK

15508 Wright Brothers Drive
Addison, Texas 75001
972.239.1505

www.acousticdimensions.com

NEW WORSHIP FACILITIES
FIRST BAPTIST CHURCH OF HIGHLAND PARK

6801 SHERIFF ROAD
LANDOVER, MARYLAND 20785

No.	Description	Date
1	BID SET	2-11-2011
2	VIDEO PRODUCTION REDESIGN	10-07-2013

STAMP

Sheet Title

VIDEO SCHEMATICS

Scale

Project Number

Sheet Number

AV7.50

© 2011 Acoustic Dimensions

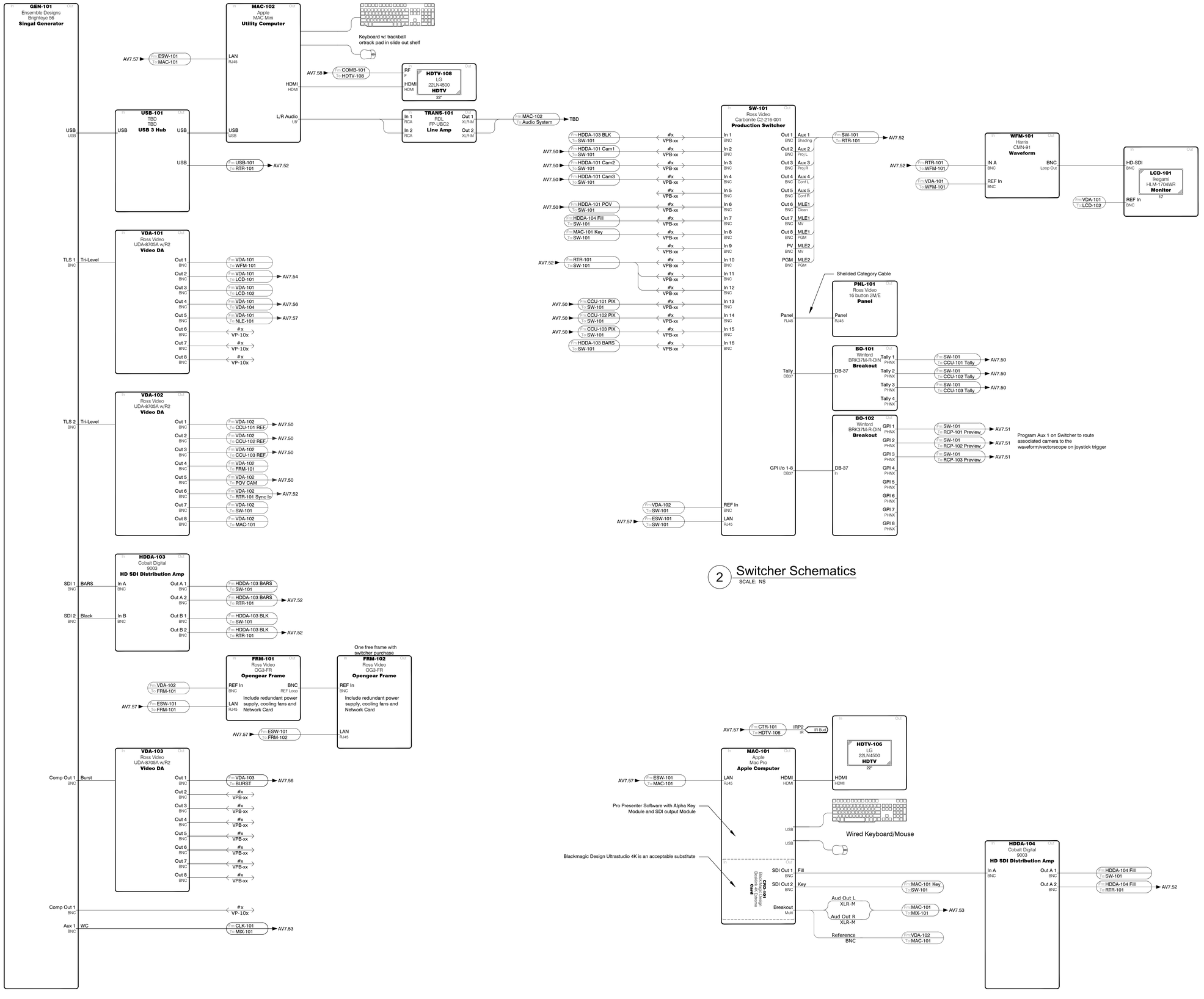

1 Terminal Gear Schematics
SCALE: NS

2 Switcher Schematics
SCALE: NS

3 CG/Playback Schematics
SCALE: NS

ACOUSTIC DIMENSIONS
DALLAS | NEW YORK | SAN DIEGO | UK
15508 Wright Brothers Drive
Addison, Texas 75001
972.239.1505
www.acousticdimensions.com

NEW WORSHIP FACILITIES
FIRST BAPTIST CHURCH OF HIGHLAND PARK
6801 SHERIFF ROAD
LANDOVER, MARYLAND 20785

No.	Description	Date
1	BID SET	2-11-2011
2	VIDEO PRODUCTION REDESIGN	10-07-2013

STAMP

Sheet Title
VIDEO SCHEMATICS

Scale

Project Number

Sheet Number
AV7.51

© 2011 Acoustic Dimensions

All Sources will feed Router, all Destinations will be fed by Router

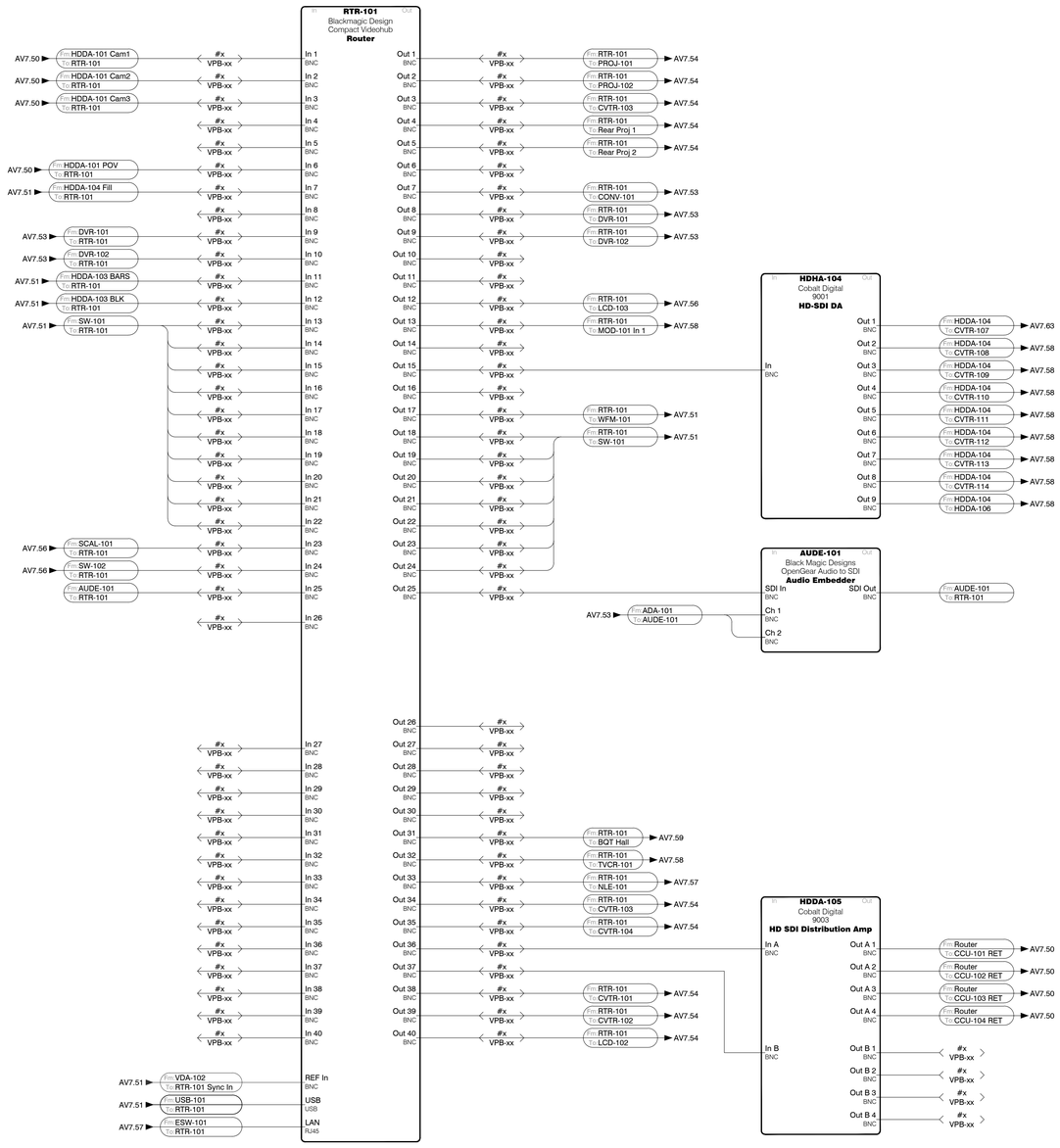

1 Router Schematics
SCALE: NS

All conduit fill without a specific detail in the schematics shall terminate in the Video Production Racks to non-normalled patch bays of the corresponding signal type.

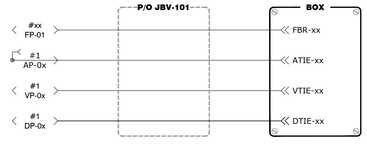

2 Facility Tie Lines Schematics
SCALE: NS

ACOUSTIC DIMENSIONS
DALLAS | NEW YORK | SAN DIEGO | UK
15508 Wright Brothers Drive
Addison, Texas 75001
972.239.1505
www.acousticdimensions.com

NEW WORSHIP FACILITIES
FIRST BAPTIST CHURCH OF HIGHLAND PARK
6801 SHERIFF ROAD
LANDOVER, MARYLAND 20785

No.	Description	Date
1	BID SET	2-11-2011
2	VIDEO PRODUCTION REDESIGN	10-07-2013

STAMP

Sheet Title
VIDEO SCHEMATICS

Scale

Project Number

Sheet Number
AV7.52

© 2011 Acoustic Dimensions

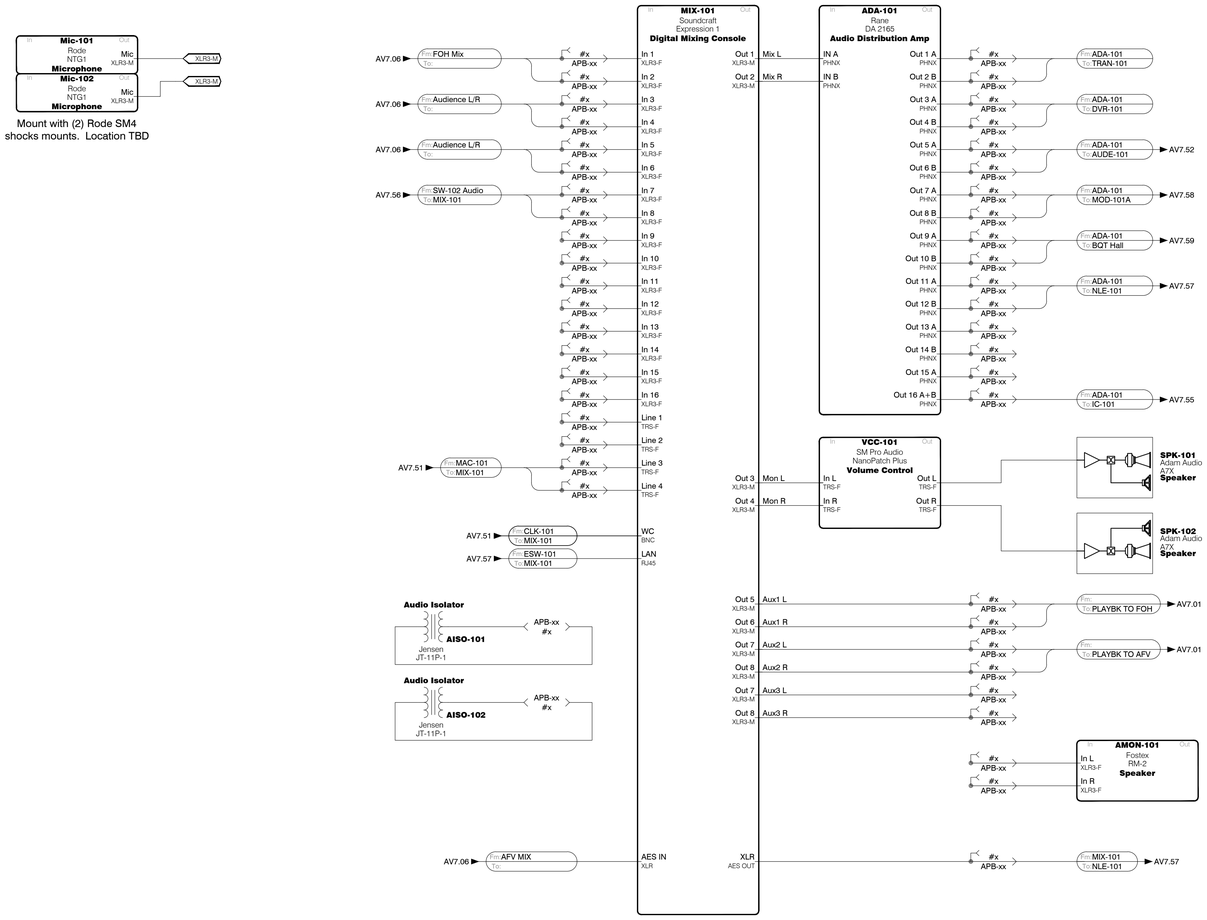

1 Audio Schematics

SCALE: NS

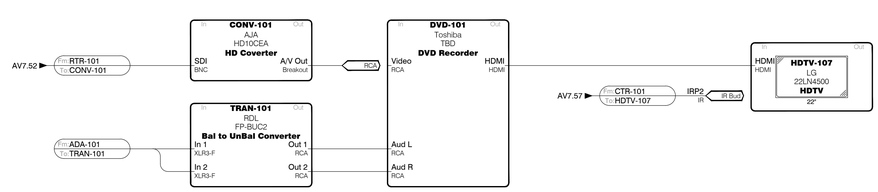

Mount Converter and
Transformer near DVD recorder

2 Recording Schematics

SCALE: NS

ACOUSTIC DIMENSIONS

DALLAS | NEW YORK | SAN DIEGO | UK

15508 Wright Brothers Drive
Addison, Texas 75001
972.239.1505

www.acousticdimensions.com

NEW WORSHIP FACILITIES
FIRST BAPTIST CHURCH OF HIGHLAND PARK

6801 SHERIFF ROAD
LANDOVER, MARYLAND 20785

No.	Description	Date
1	BID SET	2-11-2011
2	VIDEO PRODUCTION REDESIGN	10-07-2013

STAMP

Sheet Title

VIDEO SCHEMATICS

Scale

Project Number

Sheet Number

AV7.53

© 2011 Acoustic Dimensions

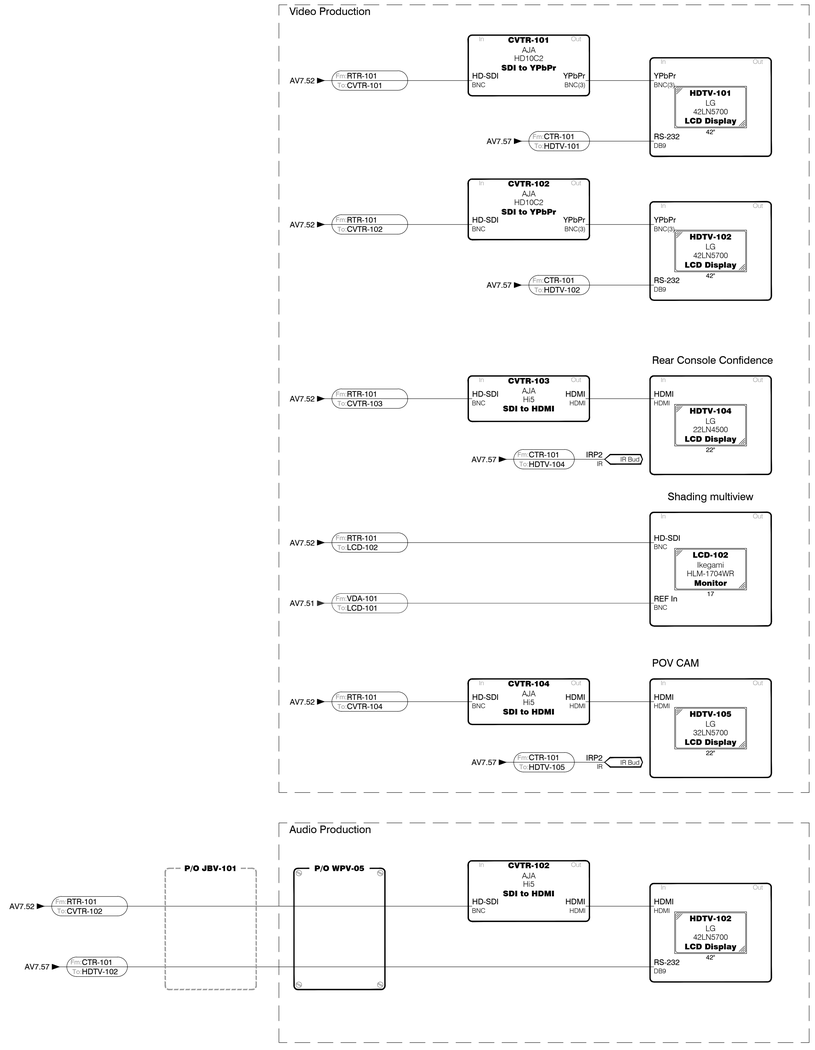

1 Display Schematics
SCALE: NS

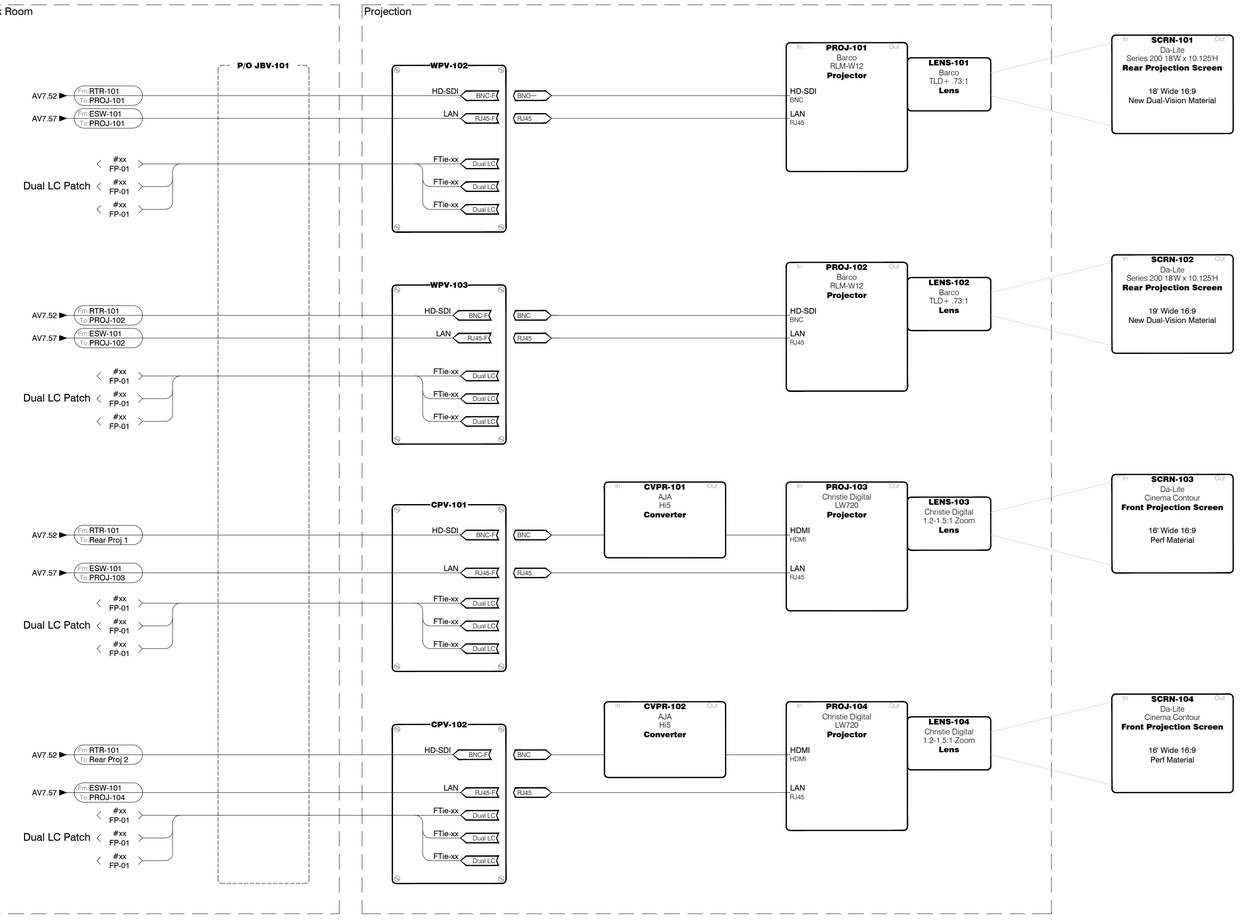

2 Worship Center Projection and Display Schematics
SCALE: NS

ACOUSTIC DIMENSIONS

DALLAS | NEW YORK | SAN DIEGO | UK

15508 Wright Brothers Drive
Addison, Texas 75001
972.239.1505

www.acousticdimensions.com

NEW WORSHIP FACILITIES
FIRST BAPTIST CHURCH OF HIGHLAND PARK

6801 SHERIFF ROAD
LANDOVER, MARYLAND 20785

No.	Description	Date
1	BID SET	2-11-2011
2	VIDEO PRODUCTION REDESIGN	10-07-2013

STAMP

Sheet Title

VIDEO SCHEMATICS

Scale

Project Number

Sheet Number

AV7.54

© 2011 Acoustic Dimensions

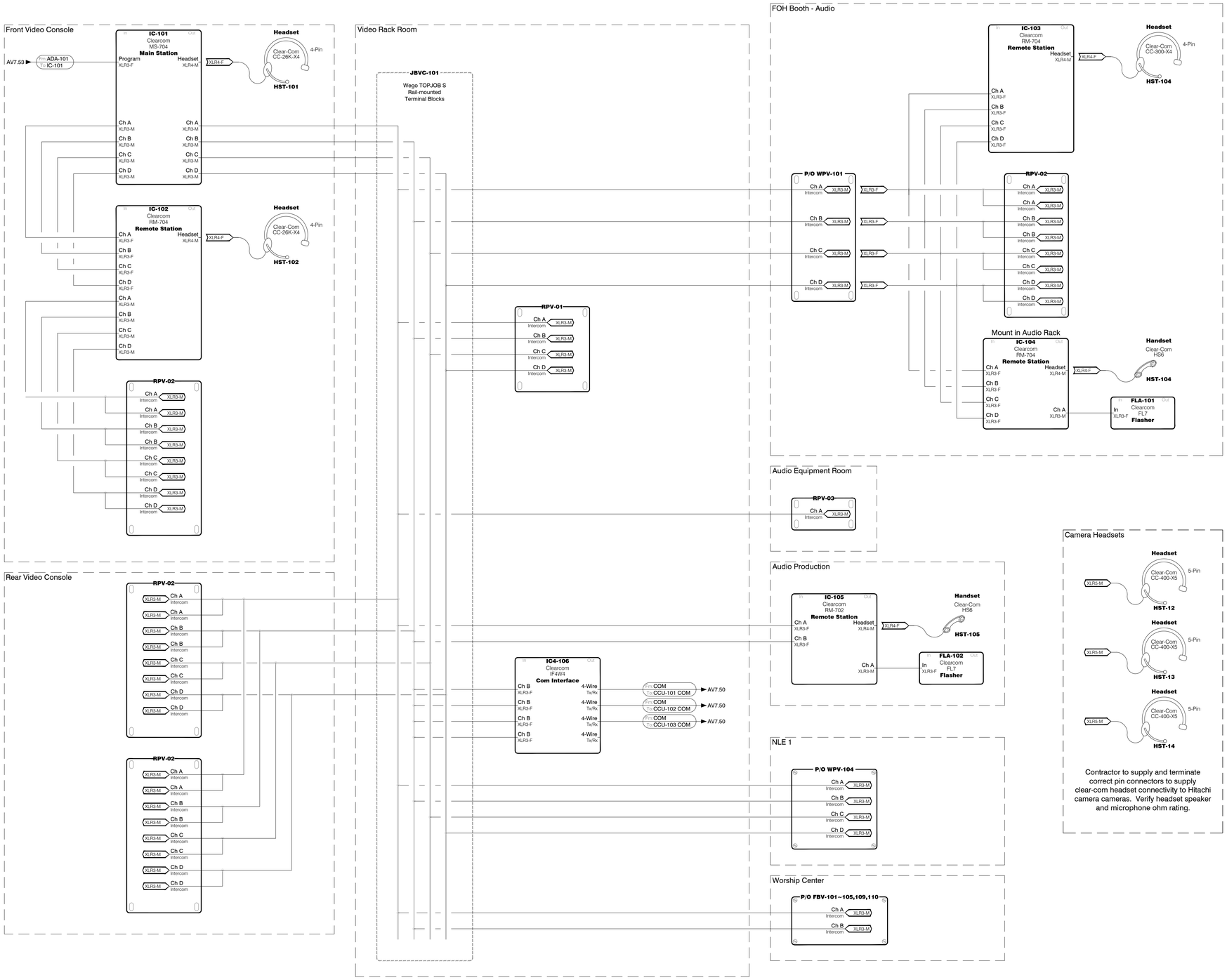

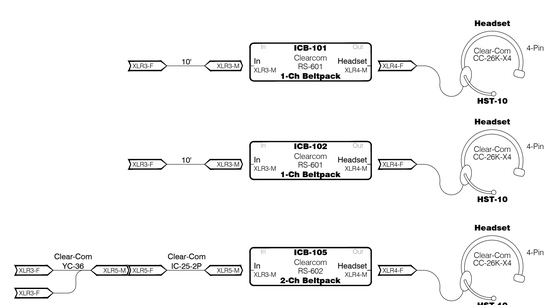

1 Intercom Schematics
SCALE: NS

ACOUSTIC DIMENSIONS
DALLAS | NEW YORK | SAN DIEGO | UK
15508 Wright Brothers Drive
Addison, Texas 75001
972.239.1505
www.acousticdimensions.com

NEW WORSHIP FACILITIES
FIRST BAPTIST CHURCH OF HIGHLAND PARK
6801 SHERIFF ROAD
LANDOVER, MARYLAND 20785

No.	Description	Date
1	BID SET	2-11-2011
2	VIDEO PRODUCTION REDESIGN	10-07-2013

STAMP

Sheet Title
VIDEO SCHEMATICS

Scale

Project Number

Sheet Number
AV7.55

© 2011 Acoustic Dimensions

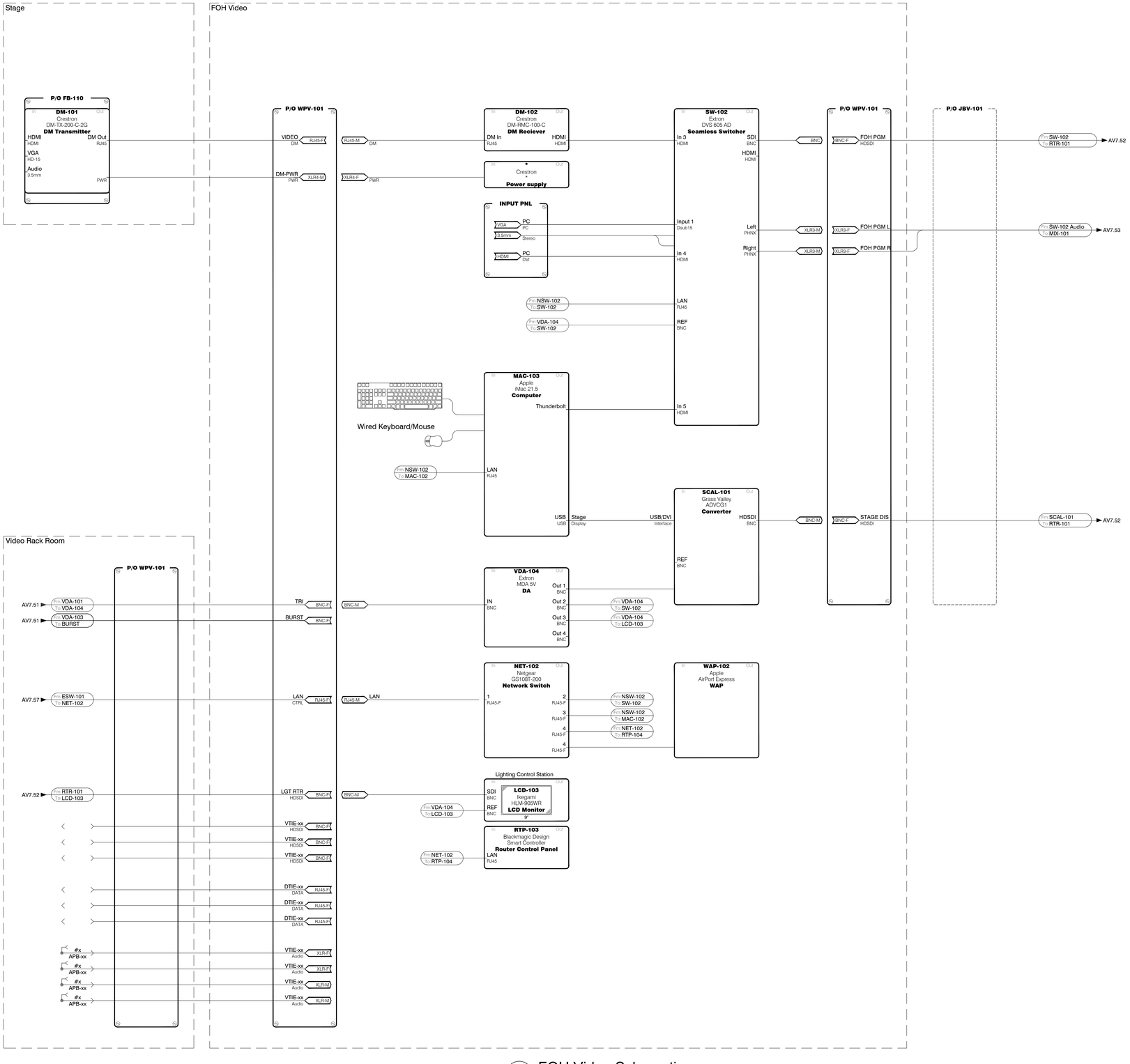

1 FOH Video Schematics

SCALE: NS

ACOUSTIC DIMENSIONS

DALLAS I NEW YORK I SAN DIEGO I UK

15508 Wright Brothers Drive
Addison, Texas 75001
972.239.1505

www.acousticdimensions.com

NEW WORSHIP FACILITIES
FIRST BAPTIST CHURCH OF HIGHLAND PARK

6801 SHERIFF ROAD
LANDOVER, MARYLAND 20785

No.	Description	Date
1	BID SET	2-11-2011
2	VIDEO PRODUCTION REDESIGN	10-07-2013

STAMP

Sheet Title

VIDEO SCHEMATICS

Scale

Project Number

Sheet Number

AV7.56

© 2011 Acoustic Dimensions

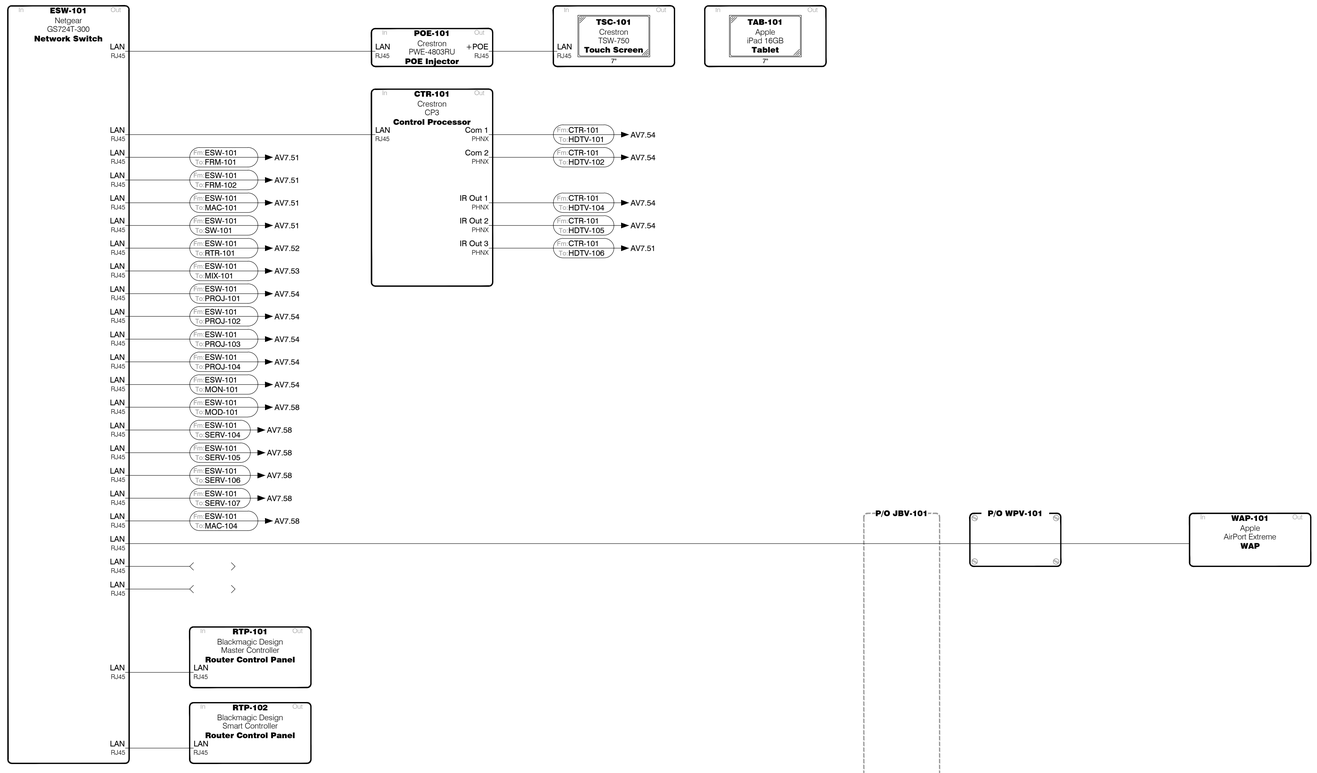

1 Network and Control Schematics
SCALE: NS

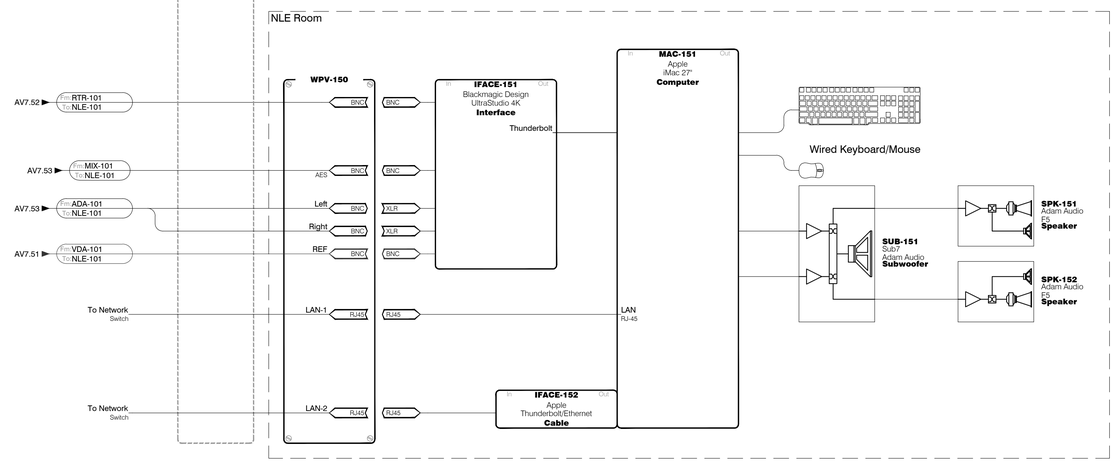

2 Non-Linear Editing Schematics
SCALE: NS

ACOUSTIC DIMENSIONS

DALLAS I NEW YORK I SAN DIEGO I UK

15508 Wright Brothers Drive
Addison, Texas 75001
972.239.1505

www.acousticdimensions.com

NEW WORSHIP FACILITIES
FIRST BAPTIST CHURCH OF HIGHLAND PARK
6801 SHERIFF ROAD
LANDOVER, MARYLAND 20785

No.	Description	Date
1	BID SET	2-11-2011
2	VIDEO PRODUCTION REDESIGN	10-07-2013

STAMP

Sheet Title

VIDEO SCHEMATICS

Scale

Project Number

Sheet Number

AV7.57

© 2011 Acoustic Dimensions

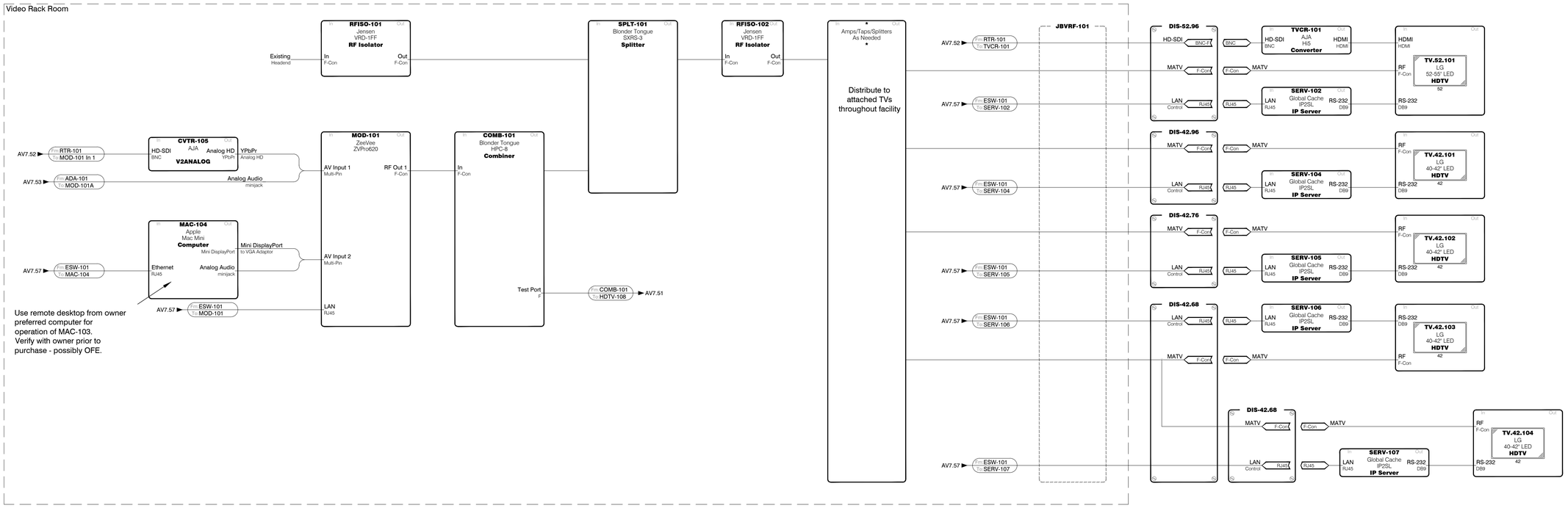

1 MATV SCHEMATIC
SCALE: NS

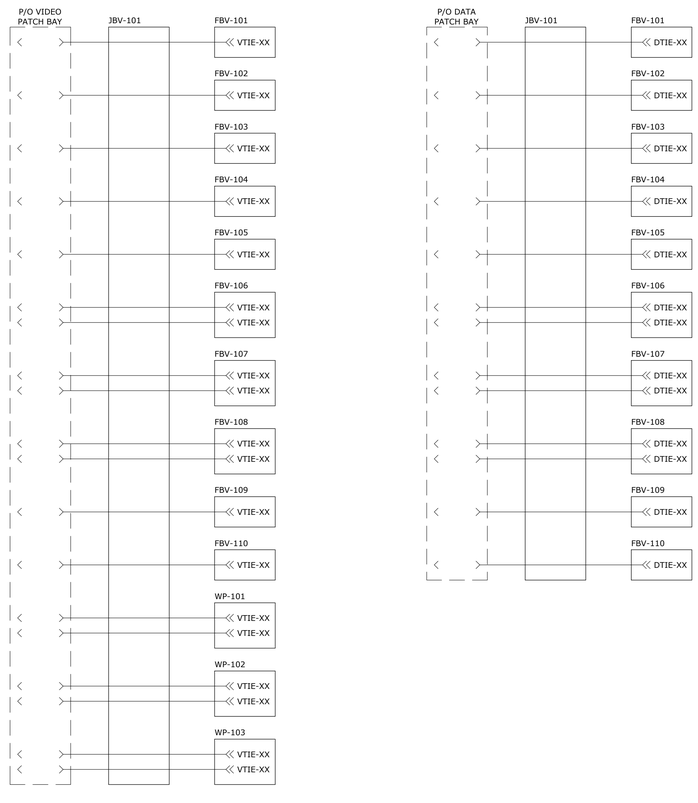

2 VIDEO AND DATA TIES SCHEMATIC
SCALE: NS

ACOUSTIC DIMENSIONS
DALLAS | NEW YORK | SAN DIEGO | UK
15508 Wright Brothers Drive
Addison, Texas 75001
972.239.1505
www.acousticdimensions.com

NEW WORSHIP FACILITIES
FIRST BAPTIST CHURCH OF HIGHLAND PARK
6801 SHERIFF ROAD
LANDOVER, MARYLAND 20785

No.	Description	Date
1	BID SET	2-11-2011
2	VIDEO PRODUCTION REDESIGN	10-07-2013

STAMP

Sheet Title
VIDEO SCHEMATICS

Scale

Project Number

Sheet Number
AV7.58

© 2011 Acoustic Dimensions

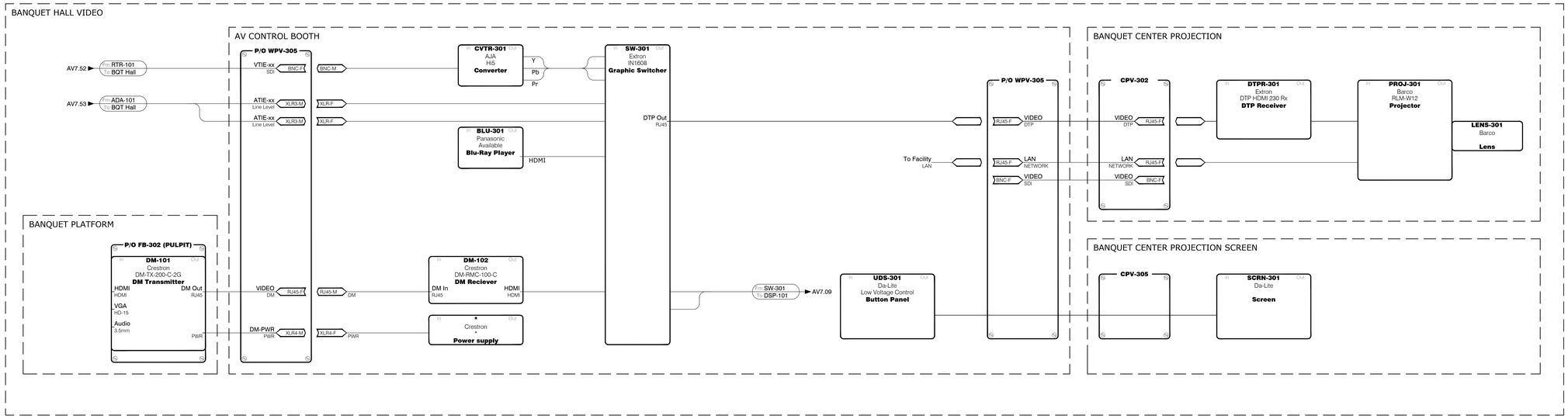

2 BANQUET HALL VIDEO SCHEMATIC

SCALE: NS

ACOUSTIC DIMENSIONS

DALLAS I NEW YORK I SAN DIEGO I UK

15508 Wright Brothers Drive
Addison, Texas 75001
972.239.1505

www.acousticdimensions.com

NEW WORSHIP FACILITIES
FIRST BAPTIST CHURCH OF HIGHLAND PARK
6801 SHERIFF ROAD
LANDOVER, MARYLAND 20785

No.	Description	Date
1	BID SET	2-11-2011
2	VIDEO PRODUCTION REDESIGN	10-07-2013

STAMP

Sheet Title

VIDEO SCHEMATICS

Scale

Project Number

Sheet Number

AV7.59

© 2011 Acoustic Dimensions